Service Manual

74CDR1/01G

Compact Disc Recorder

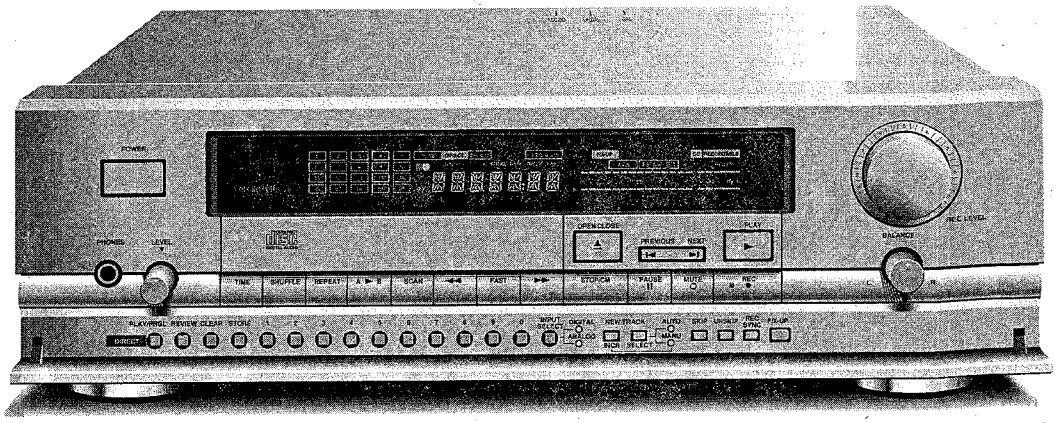

TABLE OF CONTENTS

SECTION		PAGE
1.	Warnings	1
2.	Technical specifications	2-4
3.	Controls and connections	5
4.	Dismantling instructions	6-9
5.	Servicing hints	9
6.	Block diagram	10
7.	Wiring diagram	12
8.	Circuit diagrams and printed boards	
	8. 1. Power supply circuit diagram and p.c.b.	13
	8. 2. Servo circuit diagrams and p.c.b.	14-17
	8. 3. WOSP circuit diagrams and p.c.b.	18-21
	8. 4. Encoder circuit diagrams and p.c.b.	22-25
	8. 5. Decoder circuit diagrams and p.c.b.	26-29
	8. 6. BS DAC circuit diagram and p.c.b.	30-31
	8. 7. Control & display circuit diagrams and p.c.b.	32-33
	8. 8. XLR circuit diagram and p.c.b.	34-35
	8. 9. Headphone circuit diagram and p.c.b.	36
	8.10. Level and balance circuit diagram and p.c.b.	36
	8.11. Level detection circuit diagram	36
9.	Start up procedure	38
10.	Faultfinding diagnosis	41
10.	Exploded views and mechanical partslists	42-44
11.	Electrical partslist	45

marantz®

model CDR1

First issue: 1991

4822 725 24002

MZ 3066

MARANTZ DESIGN AND SERVICE

Using superior design and selected high grade components, MARANTZ company has created the ultimate in stereo sound.
Only **original MARANTZ parts** can insure that your MARANTZ product will continue to perform to the specifications for which it is famous.

Parts for your MARANTZ equipment are generally available to our National Marantz Subsidiary or Agent.

MARANTZ INTERNATIONAL
Vestdijk 9
5600 MD Eindhoven
The Netherlands
Phone: +31/40.758290
Telefax: +31/40.75.82.99
Telex: 35000 PHTC NL routing IND NLMTFAT

ORDERING PARTS:

Parts can be ordered either by mail or by telex. In both cases, correct part number has to be specified.
The following information must be supplied to eliminate delays in processing your order:

1. Complete address
2. Complete part numbers and quantities required
3. Description of parts
4. Model number for which part is required
5. Way of shipment
6. Signature: any order form or telex must be signed otherwise such part order will be considered as null and void.

PARTS ORDERING

Parts may be ordered at the following addresses:

AUSTRIA
MARANTZ
Hietzinger Kai 137a
1130 Wien

BELGIUM
SVD DIVISION MARANTZ
Industrialaan 1
1720 Groot-Bijgaarden
Belgium
Telex: 24466

CHILE
MARANTZ
DIVISION OF PHILIPS S.A.
AV. Santa Maria, 0760
Casilla 2687
Santiago
Telex: 240.239

DENMARK
MARANTZ
Horsvinget 5
2630 Tastrup

NORWAY
MARANTZ
Postboks 7034
Åssiden
3007 Drammen

FRANCE
MARANTZ FRANCE
4 Rue Bernard Palissy
92600 Asnières
France
Telex: 611651

GERMANY
MARANTZ GERMANY GmbH
Alexanderstrasse 1
2000 Hamburg
Germany

THE NETHERLANDS
Elpro Marantz
Wint Hontlaan 28
3526 KV Utrecht
The Netherlands
Telex: 4748

SWEDEN
MARANTZ
Box 1324
171 25 Solna

FINLAND
MARANTZ
Kuortanegatan 1
00520 Helsingfors 52

GREAT BRITAIN
MARANTZ HiFi U.K. Ltd
Kingsbridge House
Padbury oaks
575-583 Bath Road
Long ford
Middlesex UB7 OEH
Faxnr.: 0753 680 428

GREECE
SHERTON ELECTRONICS S.A.
P.O.Box 21025
Hippocratus Street 188
Athens 11471
Greece
Telex: 216.795

JAPAN
MARANTZ JAPAN, Inc.
35-1, 7-chome, Sagamiono
Sagamihara-shi, Kanagawa
Japan

KUWAIT
AL ALAMIAH ELECTRONICS
Ussama Building
Fahd al Saleem Street
P.O.Box 23781
Safat-Kuwait
Telex: 22694

ITALY
MARANTZ ITALIANA S.P.A.
Via Chiese, 74
20126 Milano
Italy

SAUDI ARABIA
AL ALAMIAH ELECTRONICS
P.O.Box 5954
University Street
Riyadh 11432
Saudi Arabia
Telex: 401530

SOUTH AFRICA
MARANTZ
DIVISION OF PHILIPS S.A.
Main Road Martindale
P.O. Box. 58088
Newville 21114
South Africa

SPAIN
Euroservice S.A.
Bernardo obrëgón, 26
28012 Madrid
faxnr.: 3412 306 198

SWITZERLAND
MARANTZ
Technischer Service
Duenstrasse 3
3186 Düdingen
Switzerland

TURKEY
DOGRUOL Ltd.
I.M.C.
6 Blok N°6310
Unkapani
Istanbul
Turkey
Telex: 22085

MALTA
CACHIA & GALEA
Republic Street, 68D
Valetta
Telex: 1682

PORTUGAL
MARANTZ
Divisao philips S.A. service
Outurela-carnaxide
2795 LinDA-A-VELHA
Telex: 43906

All of the above locations are fully equipped to take care of your total service needs. Because various countries have differing configuration requirements, it is necessary that you contact the service facility in your particular country. In the event that there is no service location listed for your country, please, contact the nearest facility for the necessary assistance.

In case of difficulties, do not hesitate to contact the Technical Department at abovementioned address.

(GB) WARNING

All ICs and many other semi-conductors are susceptible to electrostatic discharges (ESD).
Careless handling during repair can reduce life drastically.
When repairing, make sure that you are connected with the same potential as the mass of the set via a wrist wrap with resistance.
Keep components and tools also at this potential.

ESD

(NL) WAARSCHUWING

Alle IC's en vele andere halfgeleiders zijn gevoelig voor electrostatische ontladingen (ESD).
Onzorgvuldig behandelen tijdens reparatie kan de levensduur drastisch doen verminderen.
Zorg ervoor dat u tijdens reparatie via een polsband met weerstand verbonden bent met hetzelfde potentiaal als de massa van het apparaat.
Houd componenten en hulpmiddelen ook op ditzelfde potentiaal.

(F) ATTENTION

Tous les IC et beaucoup d'autres semi-conducteurs sont sensibles aux décharges statiques (ESD).
Leur longévité pourrait être considérablement écourtée par le fait qu'aucune précaution n'est prise à leur manipulation.
Lors de réparations, s'assurer de bien être relié au même potentiel que la masse de l'appareil et enfiler le bracelet serti d'une résistance de sécurité.
Veiller à ce que les composants ainsi que les outils que l'on utilise soient également à ce potentiel.

(D) WARNUNG

Alle ICs und viele andere Halbleiter sind empfindlich gegen elektrostatische Entladungen (ESD).
Unsorgfältige Behandlung bei der Reparatur kann die Lebensdauer drastisch vermindern.
Sorgen sie dafür, dass Sie im Reparaturfall über ein Pulsarmband mit Widerstand mit dem Massepotential des Gerätes verbunden sind.
halten Sie Bauteile und Hilfsmittel ebenfalls auf diesem Potential.

(I) AVVERTIMENTO

Tutti IC e parecchi semi-conduttori sono sensibili alle scariche statiche (ESD).
La loro longevità potrebbe essere fortemente ridatta in caso di non osservazione della più grande cauzione alla loro manipolazione.
Durante le riparazioni occorre quindi essere collegato allo stesso potenziale che quello della massa dell'apparecchio tramite un braccialetto a resistenza.
Assicurarsi che i componenti e anche gli utensili con quali si lavora siano anche a questo potenziale.

(GB)

Safety regulations require that the set be restored to its original condition and that parts which are identical with those specified be used.

(NL)

Veiligheidsbepalingen vereisen, dat het apparaat in zijn oorspronkelijke toestand wordt teruggebracht en dat onderdelen, identiek aan de gespecificeerde worden toegepast.

(S) Varo!

Avattaessa ja suojalukitus ohitettaessa olet alttiina näkymättömälle lasersäteilylle. Älä katso säteeseen.

(D)

Bei jeder Reparatur sind die geltenden Sicherheitsvorschriften zu beachten. Der Originalzustand des Geräts darf nicht verändert werden für Reparaturen sind Original-Ersatzteile zu verwenden.

(I)

Le norme di sicurezza esigono che l'apparecchio venga rimesso nelle condizioni originali e che siano utilizzati pezzi di ricambiago identici a quelli specificati.

(SF) Varning!

Osynlig laserstrålning när denna del är öppnad och spärren är urkopplad. Betrakta ej strålen.

(F)

Les normes de sécurité exigent que l'appareil soit remis à l'état d'origine et que soient utilisées les pièces de rechange identiques à celles spécifiées.

"Pour votre sécurité, ces documents doivent être utilisés par des spécialistes agrées, seuls habilités à réparer votre appareil en panne".

TECHNICAL SPECIFICATIONS

General

1.	Mains voltage /01G	: 110V-127V-220V (±10%)
2.	Mains frequency	: 50 Hz
3.	Power consumption mains, operating	: 40 W
4.	Inclination	: max. 10°

Dimensions and weight

1.	Apparatus tray closed	: WxDxH 420 x 330 x 121/141 mm
2.	Apparatus tray open	: WxDxH 420 x 475 x 121/141 mm
3.	Weight	: 9,9 kg

Optical read-out system

1.	Laser type	: Semiconductor
2.	Wavelength	: 780 nm ±15 nm
3.	Light output	:
	(Total amount out of objective)	
	During playing	: max. 0,9 mW min. 0,7 mW
	During recording	: 14 mW (Peak) 11 mW (Writing level)

PLAYBACK

Unbalanced output

1.	Output voltage	: 2 Vrms ±1,5dB
2.	Unbalance	: max. 0,85dB
3.	Output impedance	: 200Ω
4.	Amplitude linearity	: max. ±0,05dB from 20Hz to 20kHz
5.	Phase linearity	: max. 0,6° from 20Hz to 20kHz
6.	Signal to noise ratio	: min. 95dB (A-wtg)
7.	Dynamic range	: min. 88dB from 20Hz to 20kHz
8.	Total harmonic distortion + noise	: min. 84dB from 20Hz to 20kHz
9.	Outband attenuation	: min. 60dB above 25kHz
10.	Channel separation	: min. 88dB from 20Hz to 20kHz
11.	Muting during random access	: min. 90dB

Balanced Output (XLR output)

1.	Output voltage	: 3 Vrms ±0,1dB
2.	Unbalance	: max. 0,2dB
3.	Output impedance	: 100Ω
4.	Amplitude linearity	: max. ±0,5dB from 20Hz to 20kHz
5.	Signal to noise ratio	: min. 92dB (A-wtg)
6.	Dynamic range	: min. 85dB from 20Hz to 20kHz
7.	Total harmonic distortion + noise	: min. 80dB from 20Hz to 20kHz
8.	Outband attenuation	: min. 60dB above 25kHz
9.	Channel separation	: min. 85dB from 20Hz to 20kHz
10.	Muting during random access	: min. 86dB

HEADPHONE

1.	Output voltage	: 0 to 6,5 Vrms ±2dB
2.	Unbalance	: max. 2dB
3.	Output impedance	: 120Ω
4.	Load impedance range	: 8 - 32 - 200 - 600 - 1000 - 2000Ω
5.	Output power	: 0 - 58 mW into 32Ω (max. 95 mW) 0 - 49 mW into 600Ω (max. 78 mW) 0 - 88 mW into 120Ω (max. 140 mW)
5.	Signal to noise ratio	: min. 87dB Load 600Ω
6.	Dynamic range	: min. 86dB from 20Hz to 20kHz Load 600Ω
7.	Total harmonic distortion + noise	: min. 80dB from 20Hz to 20kHz Load 600Ω
8.	Channel separation	: min. 65dB from 20Hz to 20kHz Load 600Ω
9.	Phase linearity	: max. ±0,35° from 20Hz to 20kHz

RECORD AND PLAYBACK

Unbalanced input - Unbalanced output

1.	Input sensitivity	: 0,7 Vrms for max. level (0dB on disc) 0,11 Vrms for ref. level (-16dB on disc)
2.	Unbalance	: max. 1,5dB
3.	Input impedance	: 100kΩ
4.	Amplitude linearity	: max. ±0,06dB from 20Hz to 20kHz
5.	Phase linearity	: max. ±3,85° from 20Hz to 20kHz
6.	Dynamic range	: min. 90dB (A-wtg)
7.	Dynamic range	: min. 84dB from 20Hz to 20kHz
8.	Total harmonic distortion + noise	: min. 80dB from 20Hz to 20kHz
9.	Outband attenuation	: min. 60dB above 25kHz
10.	Channel separation	: min. 80dB from 20Hz to 20kHz

Balanced input - Balanced output

1.	Input sensitivity	: 3 Vrms for max. level (0dB on disc) 0,475 Vrms for ref. level (-16dB on disc)
2.	Unbalance	: max. 08,5dB
3.	Input impedance	: 47kΩ
4.	Amplitude linearity	: max. ±0,06dB from 20Hz to 20kHz
5.	Signal to noise ratio	: min. 85dB (A-wtg)
6.	Dynamic range	: min. 84dB from 20Hz to 20kHz
7.	Total harmonic distortion + noise	: min. 78dB from 20Hz to 20kHz
8.	Outband attenuation	: min. 60dB above 25kHz
9.	Channel separation	: min. 75dB from 20Hz to 20kHz

RECORDING

Unbalanced input

1.	Input sensitivity	: 0,7 Vrms for max. level (0dB on disc) 0,11 Vrms for ref. level (-16dB on disc)
2.	Unbalance	: max. 0,3dB
3.	Amplitude linearity	: max. ±0,01dB from 20Hz to 20kHz
4.	Phase linearity	: max. ±3,25° from 20Hz to 20kHz
5.	Signal to noise ratio	: min. 94dB (A-wtg)
6.	Dynamic range	: min. 88dB from 20Hz to 20kHz
7.	Total harmonic distortion + noise	: min. 84dB from 20Hz to 20kHz
8.	Outband attenuation	: min. 86dB from 25kHz to 2,8224MHz
9.	Channel separation	: min. 85dB from 20Hz to 20kHz

Balanced input (XLR)

1.	Input sensitivity	: 3 Vrms for max. level (0dB on disc) 0,475 Vrms for ref. level (-16dB on disc)
2.	Unbalance	: max. 0,65dB
3.	Amplitude linearity	: max. ±0,02dB from 20Hz to 20kHz
4.	Phase linearity	: max. ±4,9° from 20Hz to 20kHz
5.	Signal to noise ratio	: min. 90dB (A-wtg)
6.	Dynamic range	: min. 85dB from 20Hz to 20kHz
7.	Total harmonic distortion + noise	: min. 84dB from 20Hz to 20kHz
8.	Outband attenuation	: min. 86dB from 25kHz to 2,8224MHz
9.	Channel separation	: min. 80dB from 20Hz to 20kHz

Microphone

1.	Input sensitivity	: 20 mV for max. level (0dB on disc) 3 mV for ref. level (-16dB on disc)
2.	Input impedance	: 10kΩ
3.	Microphone impedance range	: 200 - 600 - 2000Ω
4.	Amplitude linearity	: max. ±1dB from 20Hz to 20kHz
5.	Signal to noise ratio	: min. 80dB (A-wtg)
6.	Total harmonic distortion + noise	: min. 65dB from 20Hz to 20kHz
7.	Channel separation	: min. 60dB from 20Hz to 20kHz

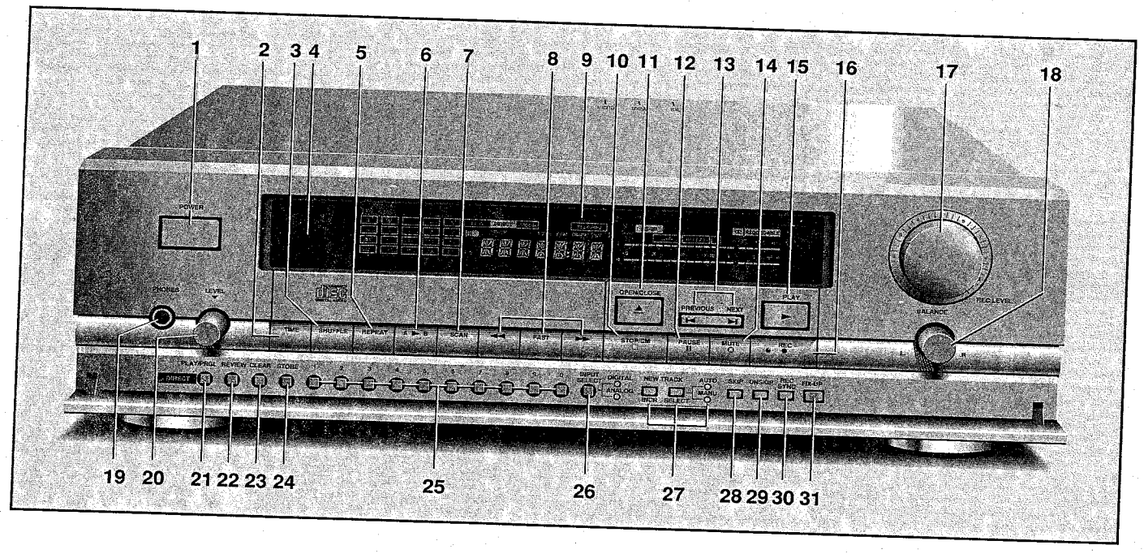

CONTROLS

Indication on set		Indication in circuit diagram	
1	POWER		1502
2	TIME		1837
3	SHUFFLE		1828
4	IR SENSOR		1802
5	REPEAT		1819
6	A ▶ B		1810
7	SCAN		1844
8	◀◀ and ▶▶		1834
		FAST	1843
9	DISPLAY		1846
10	STOP/CM		1805
11	OPEN/CLOSE		1813
12	PAUSE		1812
13	PREVIOUS and NEXT		1822
		PREVIOUS	1821
		NEXT	1830
14	MUTE		1831
15	PLAY		1839
16	RECORD		1840
17	RECORDING LEVEL		3550
18	BALANCE		3551
19	PHONES		1581
20	LEVEL		3582
21	DIRECT PLAY/PROGRAM		1838
22	REVIEW		1829
23	CLEAR		1820
24	STORE		1811
25	1-0 digit keys		
		0	1815
		1	1827
		2	1836
		3	1818
26	INPUT SELECT		
27	NEW TRACK		1824
		INCREMENT	1833
		SELECT AUTO/MANUAL	1842
28	SKIP		1814
29	UNSKIP		1823
30	REC SYNC		1832
31	FIX UP		1841
		4	1845
		5	1817
		6	1826
		7	1835
		8	1816
		9	1825

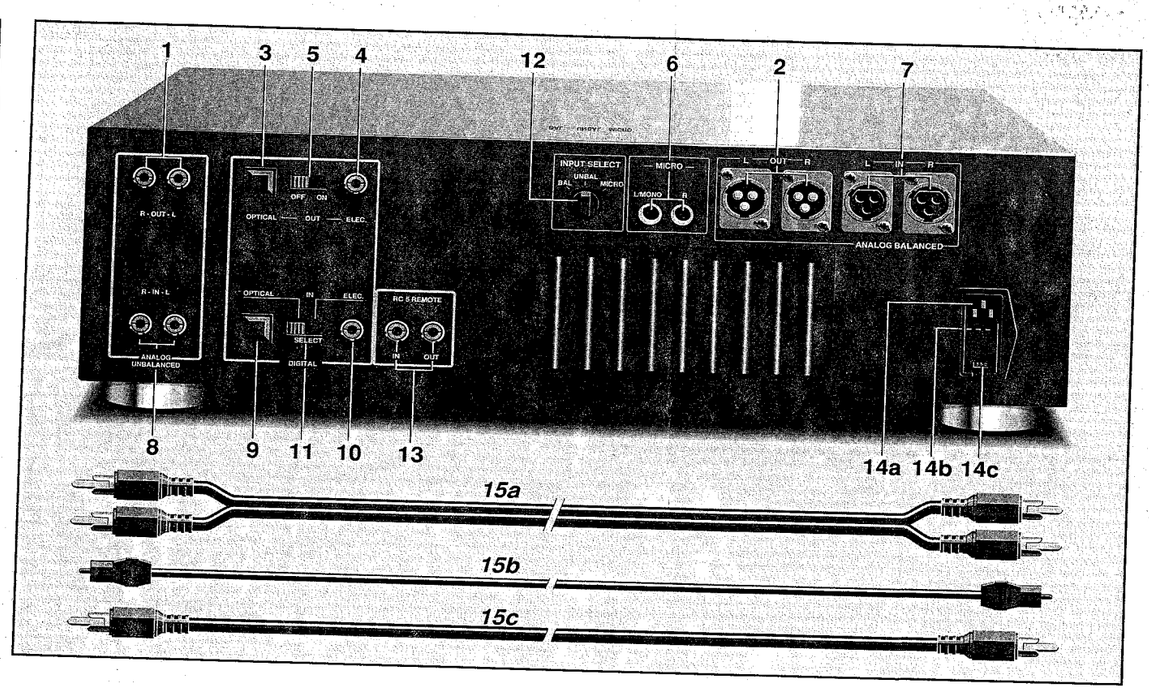

CONNECTIONS

ANALOG OUTPUTS

1	ANALOG UNBALANCED OUT	1160
2	ANALOG BALANCED OUT	L1351
		R1352

DIGITAL OUTPUTS

3	DIGITAL OUT OPTICAL	
4	DIGITAL OUT ELECTRICAL (COAXIAL)	1170
5	OFF ON	1161
		1140

ANALOG INPUTS

6	MICROPHONES	
		L1000
7	ANALOG BALANCED IN	R1001
		L1201
8	ANALOG UNBALANCED IN	R1202
		1301

DIGITAL INPUTS

9	DIGITAL IN OPTICAL	
10	DIGITAL IN ELECTRICAL (COAXIAL)	1420
11	SELECT	1422
		1421

GENERAL CONNECTIONS

12	INPUT SELECT	
13	RC5 REMOTE	1110
14	a MAINS SOCKET	1423
	b MAINS FUSE HOLDER	
	c VOLTAGE SELECTOR	
15	a 4822 321 22832	
	b 4822 321 23302	

IMPORTANT NOTE ABOUT FIX UP

- If you do not yet wish to store the recording permanently, you can remove the CDR and add to the recording at any time or skip unwanted passages and/or tracks.

- If you do not wish to store anything else on the CDR, you can store the recording permanently by pressing **FIX UP** and then **within 2 seconds REC**(ord).
FIX UP lights up on the display: the recording will now be stored. The storing will take 2 minutes and 58 seconds; this will be counted down on the display.
The recording has now been stored on the CDR and can **no longer** be changed.

ENCODER CIRCUIT DIAGRAM

22

ENCODER - 1

CONN. 1500 TO CONN. 1090 ON DECODER CIRCUIT
CONN. 1501 TO CONN. 1190 ON DECODER CIRCUIT
CONN. 1503 TO CONN. 1603 ON SERVO CIRCUIT
CONN. 1504 TO CONN. 1000 ON WOSP CIRCUIT

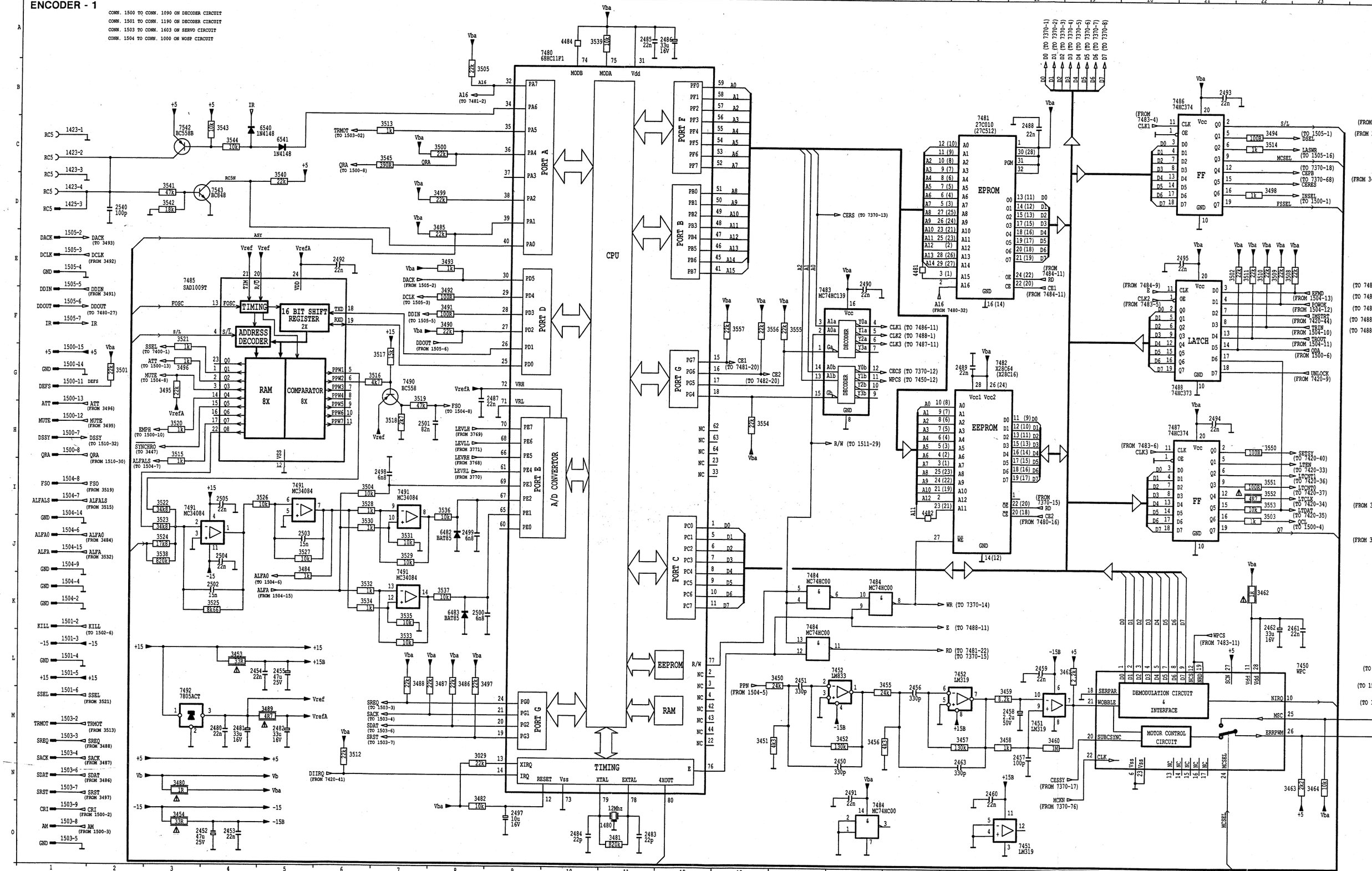

22

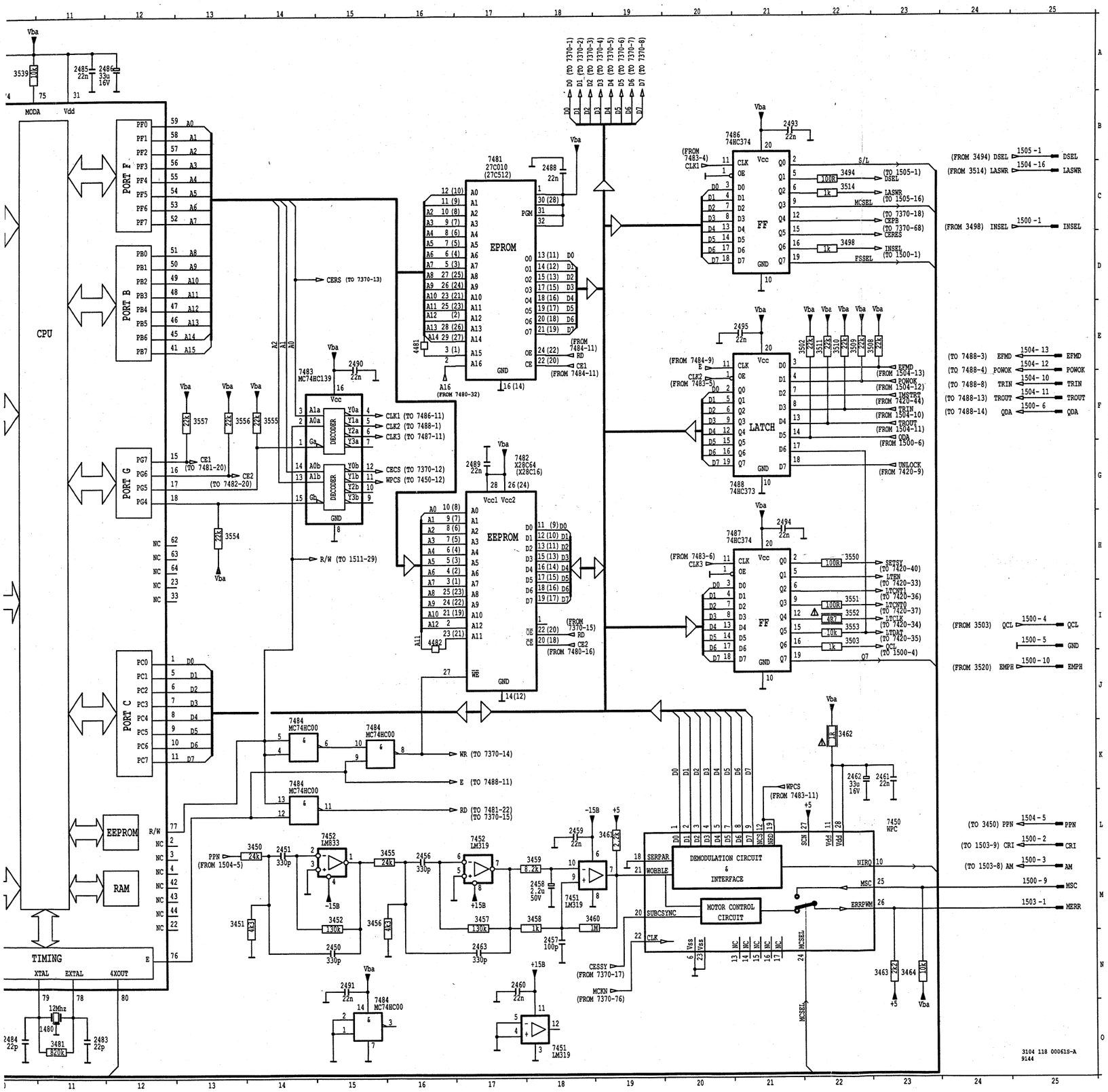

ENCODER-1

ALFA0	- Absorption Set
ALFALS	- Absorption Loop Switch
AM	- Additional Mute
ATT	- Attenuate
CE1-4	- Chip Enable
CECS	- CIRC EFM Chip Select
CEPB	- CIRC EFM Pause Bit
CERES	- CIRC EFM Reset
CLK	- System Clock Input
CLK1-3	- System Clock Input
CRI	- Counter Reset Inhit
D0 - 7	- Data Bus Bit 0 - 7
DACK	- Display Acknowledge
DCLK	- Display Clock
DDIN	- Display Data Input
DDOUT	- Display Data Output
DIIRQ	- Digital Input Interrupt Request
DSEL	- Display Select
DSSY	- Decoder Subcode Sync
EFM	- Eight to Fourteen Modulation
EFMCLK	- EFM Clock
EFMD	- Eight to Fourteen Modulation Detect
ERRPW	- Motor Control Signal Output
FSO	- Laser Power Set
GND	- Ground
IMSTRT	- Start New Message U bit Indication
INSEL	- Input Selector
IR	- Infrared Receiver Signal
LASWR	- Laser Write/Read
LEVLH	- Analog Level Left High
LEVLL	- Analog Level Left Low
LEVRH	- Analog Level Right High
LEVRL	- Analog Level Right Low
LTCLK	- Interface Data Bit Clock
LTCNT0-1	- Interface Control
LTDAT	- Interface Databus
LTEN	- Interface Enable
MCK	- Master Clock
MCSEL	- Motor Control Select
MERR	- Motor Control Error Signal
MSC	- External Motor Control Input
NCS	- Output Enable
NIRQ	- Interrupt Request
NRD	- Read Input
POWOK	- Laser Power OK
PPN	- Normalized Push Pull Signal
PPW1 - 7	- Programmable Pulse Width Outputs
QCL	- Q-channel Clock
QDA	- Q-channel Data
QRA	- Q-channel Request Acknowledge
RD	- Read
RXD	- Serial Data
SACK	- Servo Acknowledge
SCN	- Scan Enable
SDAT	- Servo Data
SERPAR	- Interface Mode Selection
SETSY	- Setting Sync Signal
SREQ	- Servo Request
SRST	- Servo Reset
SSEL	- Source Select
SUBCSYNC	- Subcode Sync Input
TRIN	- Tray In Switch
TRMOT	- Tray Motor Control
TROUT	- Tray Out Switch
TXD	- Serial Clock
WOBBLE	- Wobble Input
WPCS	- Wobble Processor Chip Select

23

ENCODER PANEL COMPONENT SIDE

1300 F11	2303 F11	2355 E8	2385 B5	2434 D11	2485 D1	2750 E5	3301 F11	3353 G8	3403 E8	3444 D10	3481 C1	3504 D1	3529 F4	3555 D3	3769 E3	6752 E5	7373 C9	7489 F5
1301 F12	2304 F11	2356 E9	2386 D9	2435 D10	2486 C1	2751 E6	3302 F11	3354 F8	3404 E8	3445 D11	3482 C1	3508 C5	3530 F3	3556 E6	3770 E3	6753 E6	7374 D9	7490 F2
1340 F10	2305 G10	2357 F9	2387 D8	2436 E11	2487 D2	2752 E6	3303 F11	3355 B10	3421 B11	3446 D11	3483 F4	3509 C7	3531 F3	3557 D1	3771 D3	6754 E4	7375 D8	7491 F4
1400 E7	2306 F11	2358 E9	2400 E9	2450 B6	2488 F2	2753 E6	3304 E11	3371 B10	3422 E11	3447 D10	3484 B5	3510 D7	3532 F3	3750 F6	3772 D5	6755 D3	7400 E9	7492 B8
1420 D12	2307 F10	2359 F9	2401 E8	2451 B6	2489 E2	2754 E4	3305 F10	3372 C9	3423 D11	3448 D10	3485 B3	3511 D7	3533 F4	3751 F6	3773 D5	6756 E4	7420 B11	7542 B11
1421 D12	2308 F10	2360 F10	2402 E8	2452 C7	2490 D4	2755 D5	3306 E11	3373 C9	3424 C11	3449 D10	3486 B5	3512 B1	3534 F4	3752 F6	3774 D5	6757 D3	7421 D11	7543 B12
1422 C12	2309 F11	2361 E10	2403 E8	2453 B7	2491 C1	2756 E4	3307 D11	3374 D9	3425 D10	3450 C5	3488 B5	3513 B5	3535 F4	3753 E6	3775 D5	6758 E5	7422 C11	7752 E6
1423 B12	2340 E9	2370 B9	2404 E8	2454 B7	2492 F2	2757 E4	3308 F11	3375 D10	3426 D11	3451 C5	3489 E3	3514 F2	3536 E3	3754 E5	4400 E9	6759 E5	7425 D11	7753 D6
1424 C10	2341 F10	2371 B9	2420 B11	2455 B8	2493 F2	2758 E6	3309 F11	3376 D10	3427 C10	3452 B7	3490 B1	3515 D3	3537 E3	3755 D6	4401 D7	6760 E3	7426 D11	7754 E3
1425 A11	2342 F9	2372 B9	2421 B11	2456 B6	2494 F2	2759 E5	3340 F10	3377 D10	3428 C10	3453 B7	3491 B1	3516 E2	3538 F3	3756 F6	4480 D1	6761 E3	7427 D11	7755 D4
1480 C1	2343 F8	2373 C9	2422 C11	2457 D4	2495 D6	2760 E4	3341 F10	3378 B10	3429 D10	3454 B7	3492 B1	3517 E2	3539 D2	3757 F6	4481 D1	7300 F11	7450 C4	
1500 F5	2344 E9	2374 C10	2423 C11	2458 C5	2496 F5	2761 E5	3342 E10	3379 D9	3430 D11	3455 B7	3493 B1	3518 E2	3540 B11	3758 E6	4482 E1	7340 F9	7451 D5	
1501 F6	2345 E10	2375 C10	2424 D10	2459 D4	2497 C1	2762 D5	3343 E9	3380 C9	3431 C11	3456 B6	3494 F2	3519 E2	3541 B11	3759 F6	4483 E1	7341 F9	7452 B7	
1502 B7	2346 F8	2376 D10	2425 C11	2460 D4	2498 D1	2763 D5	3344 F9	3381 D9	3432 C11	3457 C5	3495 F3	3520 E2	3542 B11	3760 E6	4484 C2	7342 F8	7480 C2	
1503 B6	2347 F9	2377 D10	2426 D11	2461 B3	2499 E3	2764 D4	3345 F8	3382 D9	3433 C11	3458 D4	3496 F3	3521 F3	3543 A10	3761 E6	5340 E8	7343 E7	7481 F1	
1504 B4	2348 G8	2378 C9	2427 C11	2462 C3	2500 E5	2765 E5	3346 F9	3383 C9	3434 C11	3459 C5	3497 B2	3522 F4	3544 B10	3762 E4	6420 D11	7344 F8	7482 E1	
1505 B1	2349 F7	2379 C10	2428 C11	2463 B6	2501 E2	2766 E3	3347 F9	3385 B5	3435 B11	3460 C5	3498 F2	3523 F3	3545 B3	3763 D4	6482 E3	7345 F9	7483 D5	
1510 A2	2350 E7	2380 C9	2429 C10	2480 B8	2502 F4	2767 E3	3348 F8	3386 C5	3436 C12	3461 C4	3499 B3	3524 F3	3550 F7	3764 E3	6483 E3	7346 F8	7484 C1	
1511 D2	2351 E10	2381 C10	2430 C11	2481 B8	2503 F4	2768 D3	3349 E7	3387 D9	3437 B11	3462 B3	3500 B3	3525 F4	3551 F7	3765 E3	6540 B10	7347 E11	7485 F2	
2300 E11	2352 E10	2382 D9	2431 C11	2482 D5	2504 F4	2769 D5	3350 F7	3400 D9	3438 B11	3463 B3	3501 E5	3526 F4	3552 F7	3766 E3	6541 B10	7370 C8	7486 F1	
2301 G11	2353 F10	2383 D9	2432 B11	2483 C1	2505 F4	3029 B1	3351 E10	3401 E8	3442 C10	3464 B3	3502 D7	3527 F4	3553 F3	3767 E3	6750 E5	7371 B9	7487 F2	
2302 E11	2354 F8	2384 B5	2433 B11	2484 C1	2540 B12	3300 E11	3352 F10	3402 E9	3443 E11	3480 C7	3503 F3	3528 F4	3554 D3	3768 E3	6751 E6	7372 D10	7488 D6	

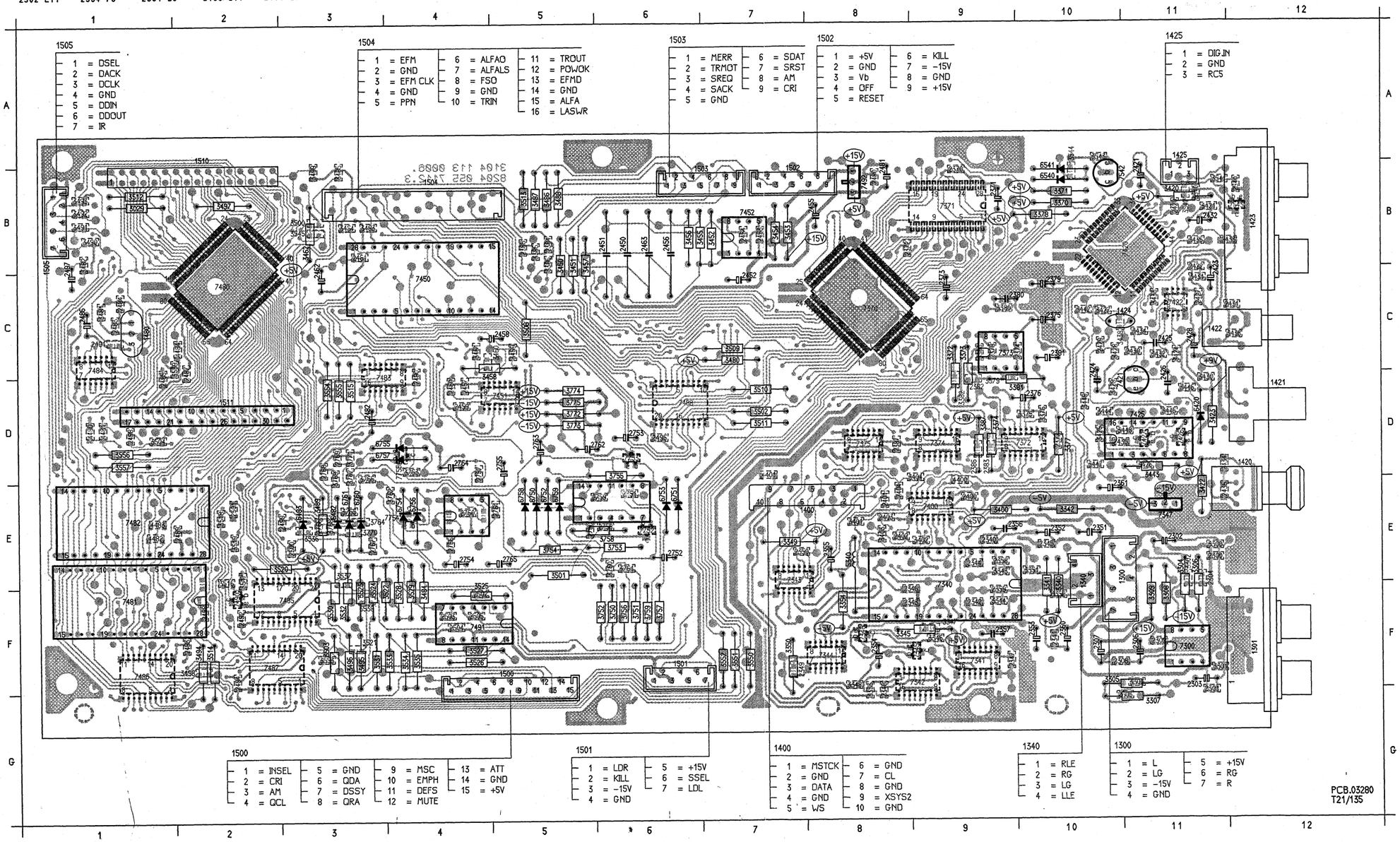

24

ENCODER PANEL SOLDER SIDE

1300 F11	2303 F11	2355 E8	2385 B5	2434 D11	2485 D1	2750 E5	3301 F11	3353 G8	3403 E8	3444 D10	3481 C1	3504 D1	3529 F4	3555 D3	3769 E3	6752 E5	7373 C9	7489 F5
1301 F12	2304 F11	2356 E9	2386 D9	2435 D10	2486 C1	2751 E6	3302 F11	3354 F8	3404 E8	3445 D11	3482 C1	3508 C5	3530 F3	3556 D1	3770 E3	6753 E6	7374 D9	7490 F2
1340 F10	2305 G10	2357 F9	2387 D8	2436 E11	2487 D2	2752 E6	3303 F11	3370 B10	3420 B11	3446 D11	3484 F4	3509 C7	3531 F3	3557 F6	3771 D3	6754 E4	7375 D8	7491 F4
1400 E7	2306 F11	2358 E9	2400 E9	2450 B6	2488 F2	2753 D6	3304 E11	3372 B10	3421 B11	3447 D10	3485 B3	3510 D7	3532 F3	3750 F6	3772 D5	6755 D3	7400 E9	7492 B8
1420 D12	2307 F10	2359 F9	2401 E8	2451 B6	2489 E2	2754 E4	3305 F10	3372 C9	3422 E11	3448 D10	3486 B5	3511 D7	3533 F4	3751 F6	3773 D5	6756 E4	7420 B11	7542 B11
1421 D12	2308 F10	2360 F10	2402 E8	2452 C7	2490 D4	2755 D5	3306 E11	3373 C9	3423 D11	3449 D10	3487 B5	3512 B1	3534 F4	3752 F6	3774 D5	6757 D3	7421 D11	7543 B12
1422 C12	2309 F11	2361 E10	2403 E8	2453 B7	2491 C1	2756 E4	3307 G11	3374 D8	3424 C11	3450 C5	3488 B5	3513 B5	3535 F4	3753 E6	3775 D5	6758 E5	7422 C11	7752 E6
1423 B12	2340 E9	2370 B9	2404 E8	2454 B7	2492 F2	2757 E4	3308 F11	3375 D10	3425 D10	3451 C5	3489 E3	3514 F2	3536 E3	3754 E5	4400 E9	6759 E5	7425 D11	7753 D6
1424 C10	2341 F10	2371 B9	2420 B11	2455 B8	2493 F2	2758 E6	3309 F11	3376 D10	3426 D11	3452 B7	3490 B1	3515 D5	3537 E3	3755 D6	4401 D7	6760 E3	7426 D11	7754 E3
1425 A11	2342 F9	2372 B9	2421 B11	2456 B6	2494 F2	2759 E5	3340 F10	3377 D10	3427 C10	3453 B7	3491 B1	3516 E2	3538 F3	3756 F6	4480 D1	6761 E3	7427 D11	7755 D4
1480 C1	2343 F8	2373 C9	2422 C11	2457 D4	2495 D6	2760 E4	3341 F10	3378 B10	3428 C10	3454 B7	3492 B1	3517 E2	3539 D2	3757 F6	4481 D1	7300 F11	7450 C4	
1500 F5	2344 E9	2374 C10	2423 C11	2458 C5	2496 F5	2761 E5	3342 E10	3379 D9	3429 D10	3455 B7	3493 B1	3518 E2	3540 B11	3758 E6	4482 E1	7340 F9	7451 D5	
1501 F6	2345 E10	2375 C10	2424 D10	2459 D4	2497 C1	2762 D5	3343 E9	3380 C9	3430 D11	3456 B6	3494 F2	3519 E2	3541 B11	3759 F6	4483 E1	7341 F9	7452 B7	
1502 B7	2346 F8	2376 D10	2425 C11	2460 D4	2498 D1	2763 D5	3344 F9	3381 D9	3431 C11	3457 C5	3495 F3	3520 E2	3542 B11	3760 E6	4484 C2	7342 F8	7480 C2	
1503 B6	2347 F9	2377 D10	2426 D11	2461 B3	2499 E3	2764 D4	3345 F8	3382 D9	3432 C11	3458 D4	3496 F3	3521 F3	3543 A10	3761 E6	5340 E8	7343 E7	7481 F1	
1504 B4	2348 G8	2378 C9	2427 C11	2462 C3	2500 E3	2765 E5	3346 F9	3383 C9	3433 C11	3459 C5	3497 B2	3522 F4	3544 B10	3762 E4	6420 D11	7344 F8	7482 E1	
1505 B1	2349 F7	2379 C10	2428 C11	2463 B6	2501 E2	2766 E3	3347 F9	3385 B5	3434 C11	3460 C5	3498 F2	3523 F3	3545 B3	3763 D4	6482 E3	7345 F9	7483 D3	
1510 A2	2350 E7	2380 C9	2429 C10	2480 B8	2502 F4	2767 E3	3348 F8	3386 C5	3435 B11	3461 C4	3499 B3	3524 F3	3550 F7	3764 E3	6483 E3	7346 F8	7484 C1	
1511 D2	2351 E10	2381 C10	2430 C11	2481 B8	2503 F4	2768 D3	3349 E7	3387 D9	3436 C12	3462 B3	3500 B3	3525 F4	3551 F7	3765 E3	6540 B10	7347 E11	7485 F2	
2300 E11	2352 E10	2382 D9	2431 C11	2482 D3	2504 F4	2769 D3	3350 F7	3400 E9	3438 C11	3463 B3	3501 D7	3526 F4	3552 F7	3766 E3	6541 B10	7370 C8	7486 F1	
2301 G11	2353 F10	2383 D9	2432 B11	2483 C1	2505 F4	3029 B1	3351 E10	3401 E8	3442 C10	3464 B3	3502 D7	3527 F4	3553 F3	3767 E3	6750 E5	7371 B9	7487 F2	
2302 E11	2354 F8	2384 B5	2433 B11	2484 C1	2540 B12	3300 E11	3352 F10	3402 E9	3443 E11	3480 C7	3503 F3	3528 F4	3554 D3	3768 E3	6751 E6	7372 D10	7488 D6	

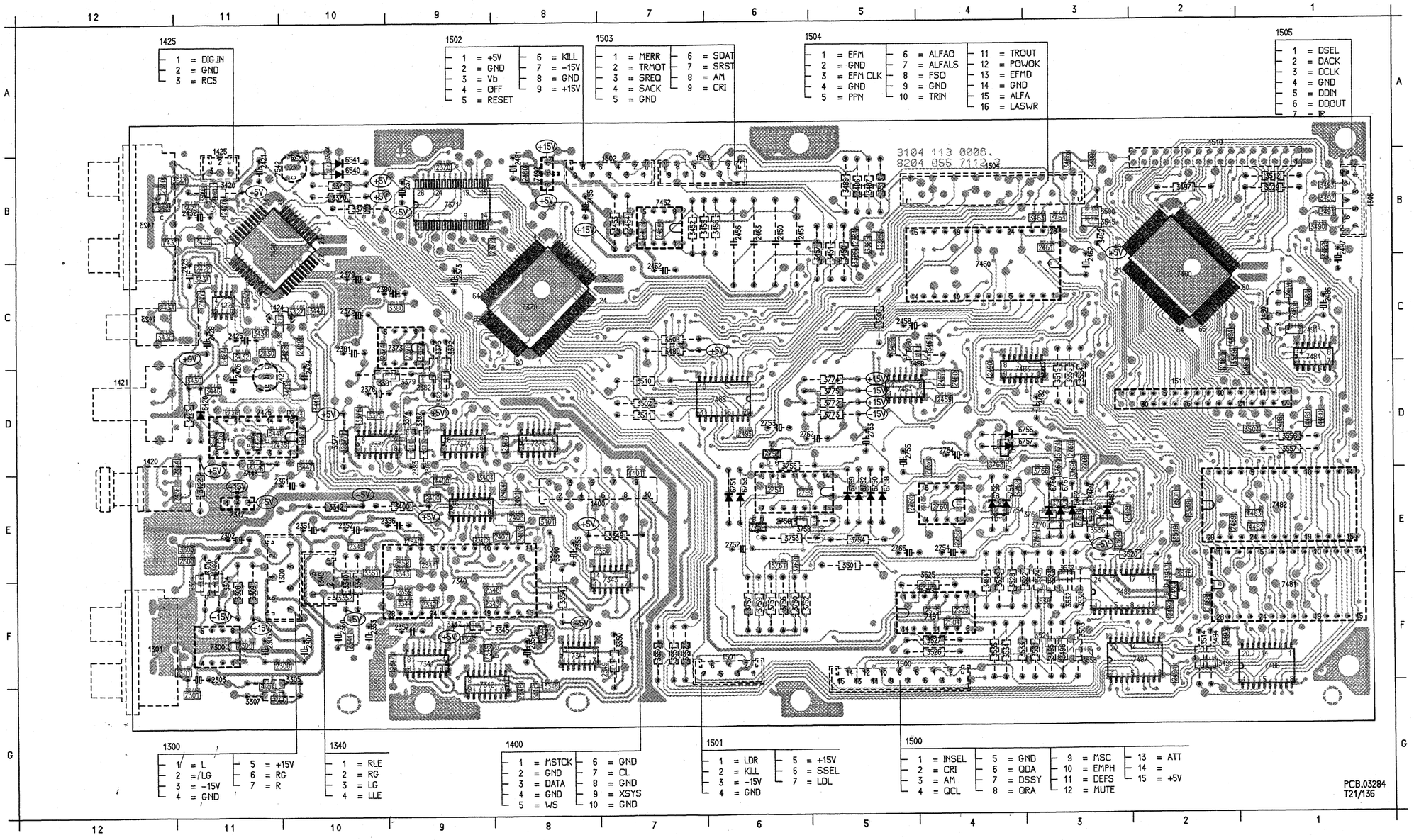

25

ENCODER CIRCUIT DIAGRAM

ENCODER - 2

CONN. 1300 TO CONN. 1040 ON XLR CIRCUIT
CONN. 1340 TO CONN. 1551 ON LEVEL AND BALANCE CIRCUIT

(XSYS2 NOT USED)

CONN. 1400 TO CONN. 1230 ON DECODER CIRCUIT

INPUT LEFT

INPUT RIGHT

( ) = NEC PLR102 layout

7300 (A) NE5532

7300 (B) NE5532

7340 CS5326

7342 MC74HC163

7344 (A) MC74HC74

7344 (B) MC74HC74

7343 74HC04

7420 M51581

7400 PC74HC157

7371 FCB61C65L-70T

7425 MC74HC4053N

7426 BC848

7427 BC848

7345 BC818

7346 BC848

7422 (A) LM358

7422 (B) LM358

7343 (D) 74HC04

MICROCONTROLLER
CALIBRATION SRAM
CONTROLLER
VOLTAGE REFERENCE
LP FILTER
DAC
COMPARATOR
3-STAGE DIGITAL DECIMATION FILTER
SERIAL OUTPUT INTERFACE
TIMING GENERATOR
AUDIO INTERFACE
SELECTION
INVERTOR
PHASE DETECTOR
SYSTEM CONTROL
CLOCK
MODULATION PREAMBLE GEN.
LOCK P
FRAME COMPOSITION DECOMPOSITION
DEMODULATION PREAMBLE DETECTION
SELECTION LEVEL CONVERSION
NON AUDIO INTERFACE
CRC
FIBER OPTIC RECEIVER MODULE TORX174 (PLR102)
MTIM
INF

25

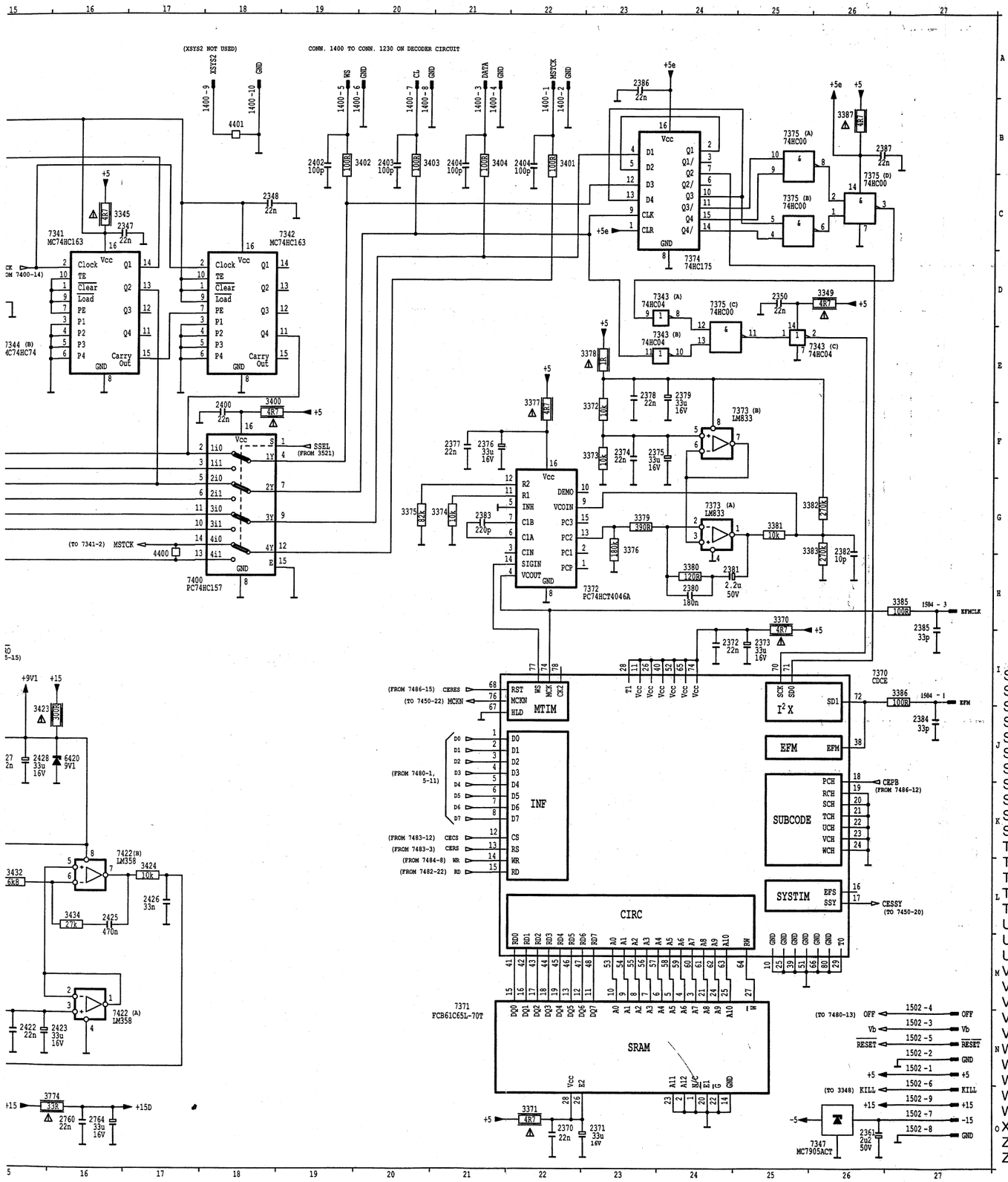

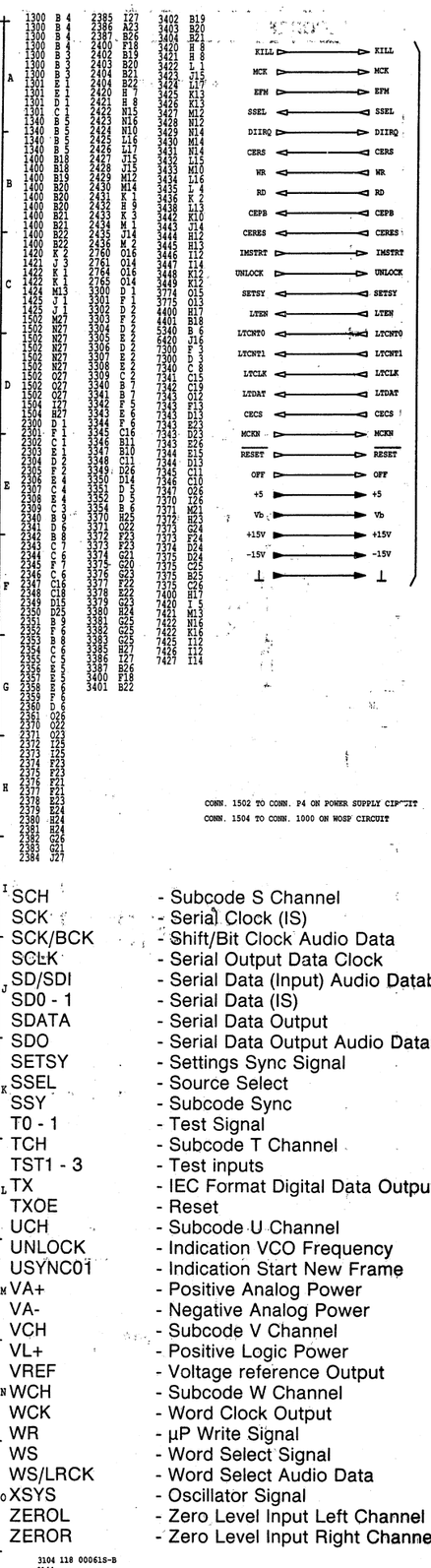

3104 118 00061S-B
9144

ENCODER-2

A0-10	- RAM Addressbus Bit 0 - 10
ACAL	- Analog Calibrate
ACLKA	- Analog Section Output Clock
ADSDI	- Serial Data Input AD Converter Data
ADSEL	- Serial Date Output Source Selection
AGND	- Analog Ground
AINL	- Left Channel Analog Input
AINR	- Right Channel Analog Input
APD	- Analog Power Down
ASL	- Audio Sample Length
CECS	- CIRC EFM Chip Select
CEFS	- CIRC EFM Frame Sync
CEPB	- CIRC EFM Pause Bit
CERES	- CIRC EFM Reset
CERS	- CIRC EFM Register Select
CESSY	- CIRC EFM Subcode Sync
CK2	- Master Clock /2
CKACO	- Frequency Accuracy Check Output
CKSEL	- Master Clock Frequency Select
CL	- Clock Signal
CLKIN	- Master Clock Input
CS	- Chip Select
D0 - 7	- Databus Bit 0 - 7
DCAL	- Digital Calibrate Output
DCLKA	- Digital Section Clock Input
DGND	- Digital Ground
DIIRQ	- Digital Input Interrupt Request
DPD	- Digital Power Down
EFM	- Eight to Fourteen Modulation
FLAGI	- Error Flag Input
FLAGO	- Error Flag Output
GND	- Ground
HLD	- Hold Signal
IIS	- IS Format Selection
IMSTRT	- Start New Message U bit Indication
IRQU	- Indication Information Message
L	- Left
L/R	- Left/Right Select
LDL	- Level Detection Left
LDR	- Level Detection Right
LEVLH	- Analog Level Left High
LEVLL	- Analog Level Left Low
LEVRH	- Analog Level Right High
LEVRL	- Analog Level Right Low
LGND	- Logic Ground
LLE	- Left Level
LRCKPOL	- Polarity LRCK Select
LTCLK	- Interface Data Bit Clock
LTCNT0-1	- Interface Control
LTDATA	- Interface Databus
LTEN	- Interface Enable
MCK	- Master Clock
MCKN	- Master Clock NOT
MODE0 - 1	- Mode Select
MSBF	- Most Significant Bit First Select
MSTCK	- Master Clock
MUTE	- Mute Control
NFR	- Output Level Convertor RX1
PCH	- Subcode PChannel
PD12	- Phase Detector Outputs
R	- Right
RCH	- Subcode RChannel
RD	- µP Read Signal
RD0 - 7	- RAM Databus Bit 0 - 7
REFCK	- Reference Clock Frequency Accuracy Check
RLE	- Right Level
RS	- Register Select
RST	- Hard Reset
RX1	- IEC Format Digital Audio Data Input (Coaxial Input)
RX2	- IEC Format Digital Audio Data Input (Optical Input)
RXCKIO	- Input/Output VCO Frequency
RXSEL	- Selection RX1 Or RX2
SCH	- Subcode S Channel
SCK	- Serial Clock (IS)
SCK/BCK	- Shift/Bit Clock Audio Data
SCLK	- Serial Output Data Clock
SD/SDI	- Serial Data (Input) Audio Databus
SD0 - 1	- Serial Data (IS)
SDATA	- Serial Data Output
SDO	- Serial Data Output Audio Databus
SETSY	- Settings Sync Signal
SSEL	- Source Select
SSY	- Subcode Sync
T0 - 1	- Test Signal
TCH	- Subcode T Channel
TST1 - 3	- Test inputs
TX	- IEC Format Digital Data Output
TXOE	- Reset
UCH	- Subcode U Channel
UNLOCK	- Indication VCO Frequency
USYNC01	- Indication Start New Frame
VA+	- Positive Analog Power
VA-	- Negative Analog Power
VCH	- Subcode V Channel
VL+	- Positive Logic Power
VREF	- Voltage reference Output
WCH	- Subcode W Channel
WCK	- Word Clock Output
WR	- µP Write Signal
WS	- Word Select Signal
WS/LRCK	- Word Select Audio Data
XSYS	- Oscillator Signal
ZEROL	- Zero Level Input Left Channel
ZEROR	- Zero Level Input Right Channel

DECODER CIRCUIT DIAGRAM

26

DECODER - 1

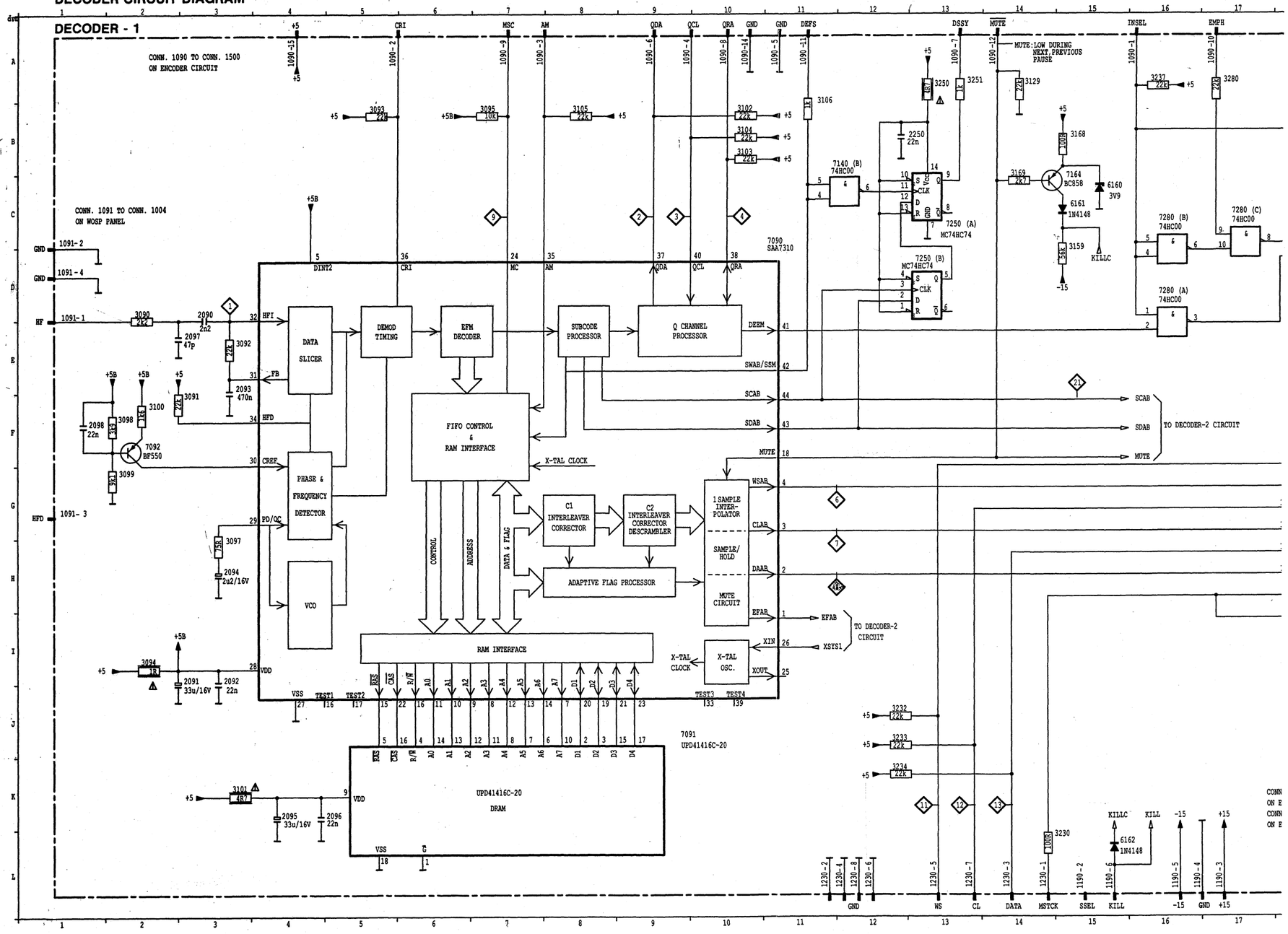

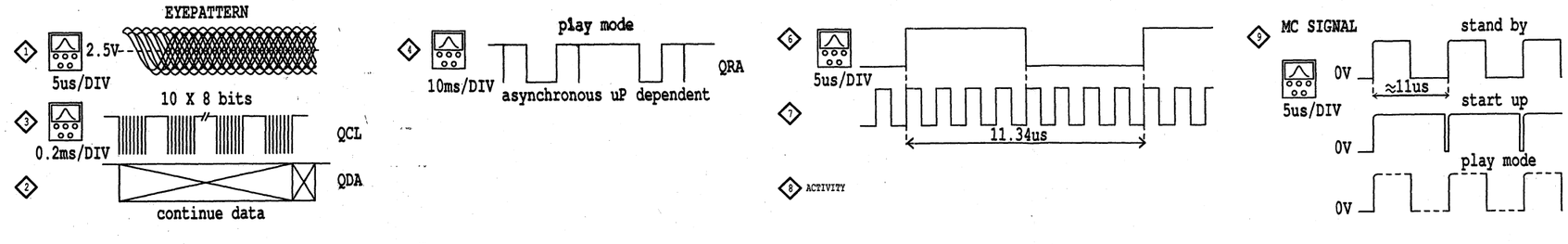

3104 118 00071R_A

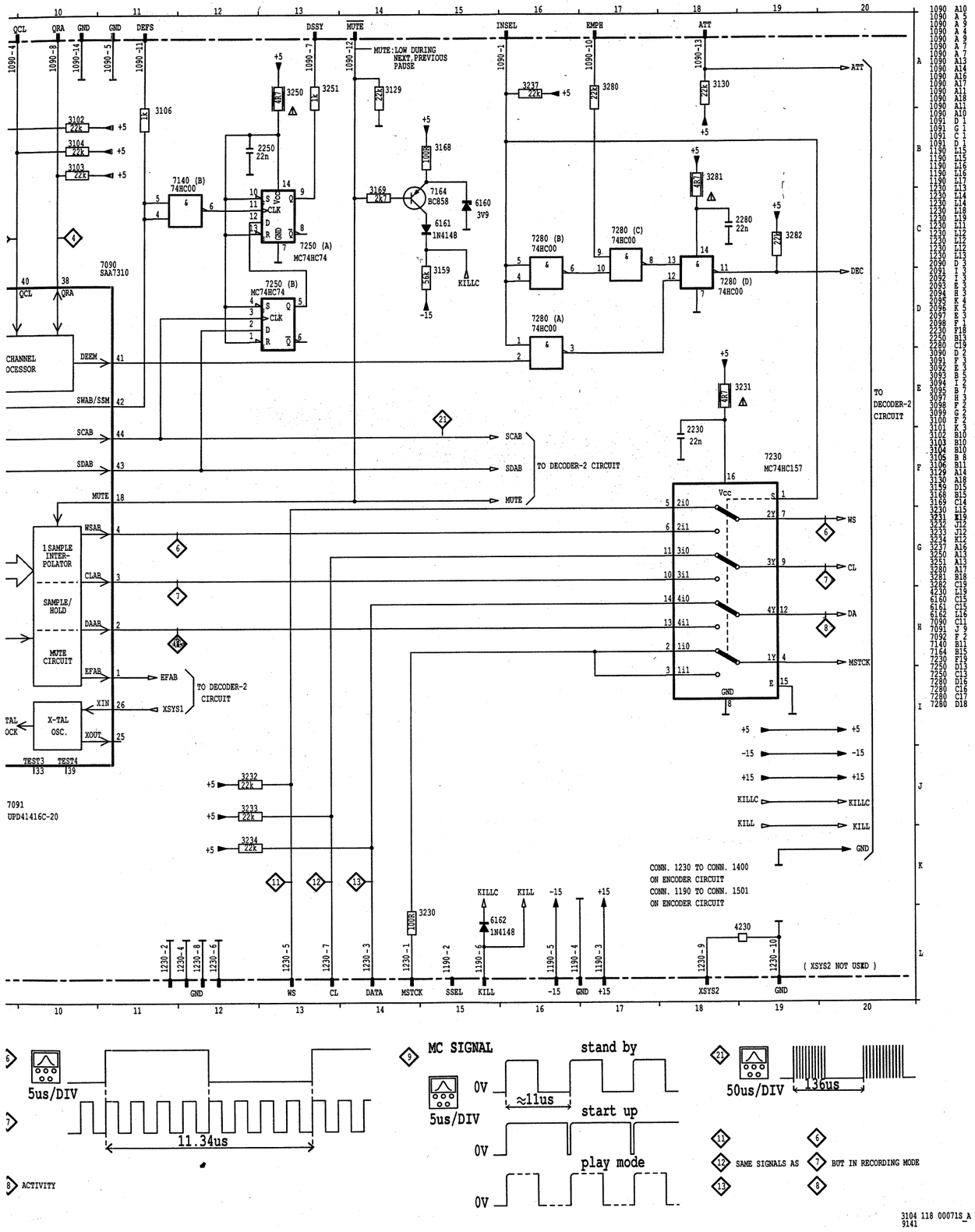

3104 118 00071S_A
9141

DECODER-1

AM	- Additional Mute
ATT	- Attenuation
CL	- Clock Signal
CLAB	- Clock Signal Decoder-A to Filter-B
CREF	- Reference Current
CRI	- Counter Reset Inhibit
DA	- Data Signal
DAAB	- Data Signal Decoder-A to Filter-B
DEC	- Deemphasis Control
DEEM	- Deemphasis
DSSY	- Decoder Subcode Sync
EFAB	- Error Flag Decoder-A to Filter-B
FB	- Feed Back
GND	- Ground
HF	- High Frequency
HFD	- High Frequency Detection
HFI	- High Frequency Input
INSEL	- Input Selector
MC	- Motor Control Signal
MSC	- External Motor Control Input
MSTCK	- Master Clock
MUTE	- Mute Signal
PD/OC	- Phase Detector - Oscillator Control
QCL	- Q-Channel Clock Signal
QDA	- Q-Channel Data Signal
QRA	- Q-Channel Request Acknowledge
SCAB	- Subcode Clock Decoder-A to Filter-B
SDAB	- Subcode Data Decoder-A to Filter-B
SWAB/SSM	- Subcode Word/Start-Stop Motor Signal
WS	- Word Select
WSAB	- Word Select Decoder-A to Filter-B
XIN	- Oscillator Signal in Decoder-A
XOUT	- Oscillator Signal out Decoder-A
XSYS	- Oscillator Signal

27

DECODER PANEL COMPONENT SIDE

1091 B1	2091 C1	2170 C10	2262 D8	3097 B1	3142 E6	3180 E6	3236 C4	3281 C5	3815 E5	4192 D5	7092 C1	9001 C3	9016 B5	9032 B2	9048 D2
1092 D3	2092 C1	2171 C9	2263 E9	3098 C1	3144 F6	3181 E6	3237 B3	3282 E4	3816 B3	4193 F4	7140 D6	9002 B6	9017 C7	9033 C2	9049 D2
1140 D10	2093 C2	2180 E6	2264 B7	3099 C1	3159 C7	3190 C6	3250 B2	3801 B2	3817 C4	4230 B4	7160 B8	9003 D4	9018 E7	9034 E5	9050 E4
1141 F5	2094 B2	2181 E9	2265 B8	3100 C1	3160 B8	3191 D4	3251 B2	3802 E1	3818 B3	4260 C7	7161 B9	9004 C3	9019 C1	9035 B2	9051 E7
1150 C8	2095 E3	2182 E6	2266 D8	3101 E2	3161 B9	3195 E6	3260 B7	3803 E5	3819 C2	4261 C8	7162 C9	9005 E9	9020 B2	9036 B2	9052 D6
1151 D8	2096 E2	2190 D6	2267 E9	3102 B2	3162 D9	3196 D6	3261 F8	3804 D9	3820 B2	4262 C7	7163 C9	9006 E7	9021 B4	9037 B1	9054 E6
1152 B9	2097 B1	2191 D6	2268 B8	3103 B2	3163 C9	3197 F4	3262 B6	3805 D6	3821 B2	4263 C7	7164 B5	9007 D3	9022 B4	9038 E5	9055 B9
1160 B10	2098 C1	2192 D4	2269 D9	3104 C2	3164 B8	3198 E4	3263 F8	3806 C4	3822 C2	4264 E8	7190 D5	9008 E9	9024 D4	9039 C1	9056 E4
1161 E10	2099 C5	2196 E6	2280 D4	3105 B2	3165 B9	3199 E4	3272 C7	3807 C6	3823 B1	5160 B8	7191 E4	9009 E4	9025 B5	9040 E2	9060 C8
1170 D10	2140 E6	2230 C4	3090 B1	3106 B2	3166 C9	3230 C4	3273 D8	3808 D5	3825 C2	6141 E6	7192 E4	9010 E5	9026 C1	9041 E1	9061 E5
1171 E6	2142 E7	2231 B4	3091 B1	3108 C5	3167 C9	3231 C4	3274 C8	3809 C5	3828 D3	6160 B5	7230 C4	9011 C5	9027 E1	9042 D1	9062 C9
1180 E6	2160 B8	2232 C4	3092 C2	3129 B3	3168 B5	3232 C3	3275 C7	3810 D1	3845 D3	6161 B5	7250 C2	9012 E3	9028 D1	9043 D1	9063 D7
1190 C8	2161 B9	2250 C3	3093 B2	3130 B3	3169 B5	3233 B4	3276 B7	3812 E8	4160 B8	6162 B8	7260 B7	9013 B8	9029 C3	9045 D2	9064 F9
1230 B4	2162 C9	2260 B7	3094 B1	3140 D7	3170 D9	3234 B4	3277 D9	3813 C7	4190 D5	7090 D1	7261 D8	9014 D4	9030 D4	9046 D2	9065 F9
2090 B1	2163 C9	2261 B6	3095 B1	3141 D9	3171 D9	3235 C4	3280 B3	3814 C8	4191 D5	7091 E2	7280 D4	9015 D8	9031 C5	9047 D2	9260 E8

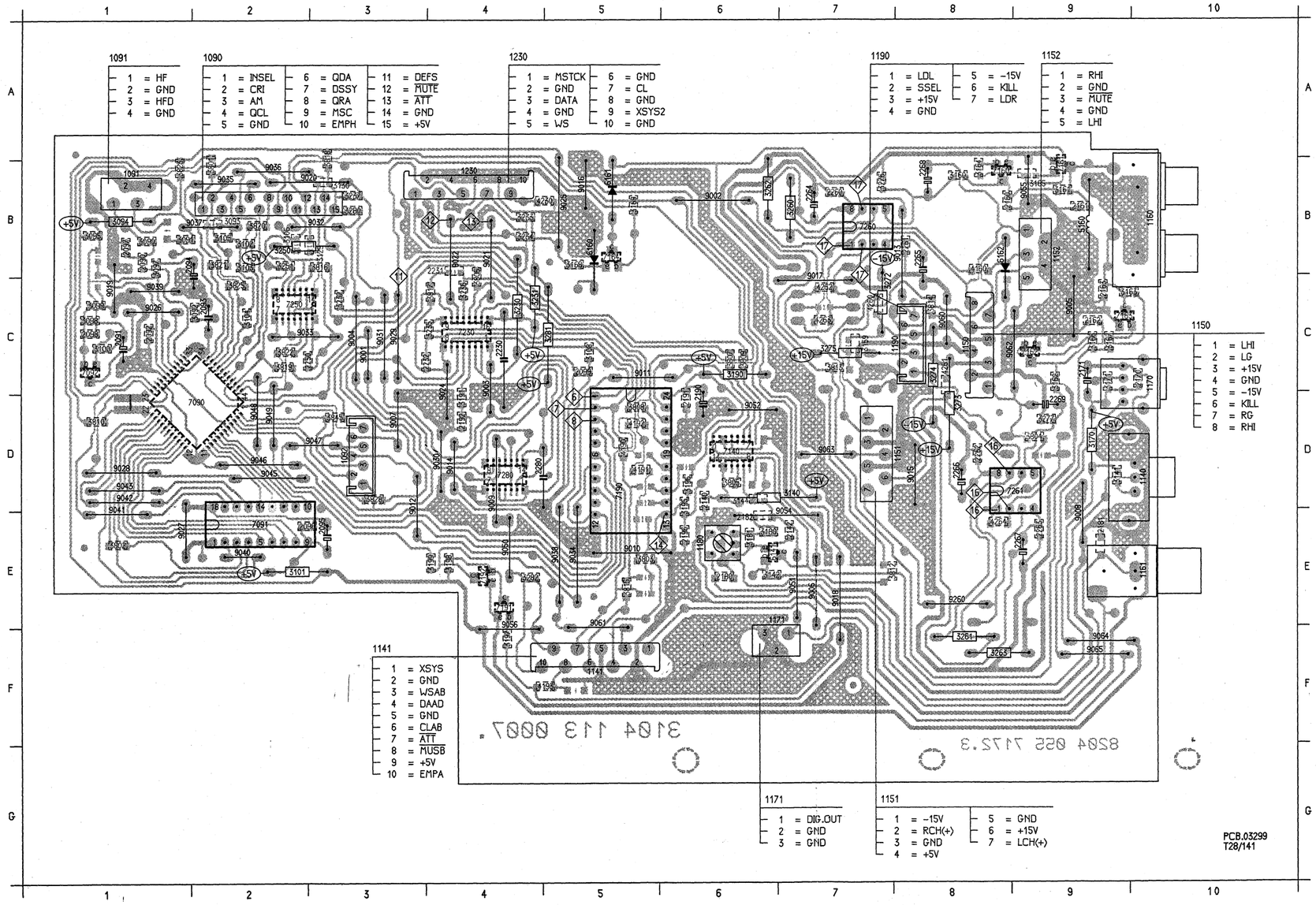

28

DECODER PANEL SOLDER SIDE

1091 B1	2091 C1	2170 C10	2262 D8	3097 B1	3142 E6	3180 E6	3236 C4	3281 C5	3815 E5	4192 D5	7092 C1	9001 C3	9016 B5	9032 B2	9048 D2
1092 D3	2092 C1	2171 C9	2263 E9	3098 C1	3144 D6	3181 E6	3237 B3	3282 E4	3816 B3	4193 F4	7140 D6	9002 B6	9017 C7	9033 C2	9049 D2
1140 D10	2093 C2	2180 E6	2264 B7	3099 C1	3159 C7	3190 C6	3250 B2	3801 B2	3817 C4	4230 B4	7150 B8	9003 D4	9018 E7	9034 E5	9050 E4
1141 F5	2094 B2	2181 E9	2265 B8	3100 C1	3160 B8	3191 D4	3251 B2	3802 E1	3818 B3	4260 C7	7161 B9	9004 C3	9019 C1	9035 B2	9051 E7
1150 C8	2095 E3	2182 E6	2266 D8	3101 E2	3161 B9	3195 E6	3260 B7	3803 E5	3819 C2	4261 C8	7162 C9	9005 C9	9020 B2	9036 B2	9052 D6
1151 D8	2096 E2	2190 D6	2267 E9	3102 B2	3162 D9	3196 D6	3261 F8	3804 D9	3820 B2	4262 C7	7163 C9	9006 E7	9021 B4	9037 B1	9054 E6
1152 B9	2097 B1	2191 D6	2268 B8	3103 B2	3163 C9	3197 F4	3262 B6	3805 D6	3821 B2	4263 C7	7164 B5	9007 D3	9022 B4	9038 E5	9055 B9
1160 B10	2098 C1	2192 D4	2269 D9	3104 C2	3164 B8	3198 E4	3263 F8	3806 C4	3822 C2	4264 E8	7190 D5	9008 E9	9024 D4	9039 C1	9056 E4
1161 E10	2099 C5	2196 E6	2280 D4	3105 B2	3165 B9	3199 E4	3272 C7	3807 C6	3823 B1	5160 B9	7191 E4	9009 E4	9025 B5	9040 E2	9060 C8
1170 D10	2140 E6	2230 C4	3090 B1	3106 B2	3166 C9	3230 C4	3273 D8	3808 D5	3825 C2	6141 E6	7192 E4	9010 E5	9026 C1	9041 E1	9061 E5
1171 E6	2142 E7	2231 B4	3091 B1	3108 C5	3167 C9	3231 C4	3274 C8	3809 C6	3828 D5	6160 B5	7230 C4	9011 C5	9027 E1	9042 D1	9062 C9
1180 E6	2160 B8	2232 C4	3092 C2	3129 B5	3168 B5	3232 C3	3275 C7	3810 D1	3845 D5	6161 B5	7250 C2	9012 E3	9028 D1	9043 D1	9063 D7
1190 C8	2161 B9	2250 C3	3093 B2	3130 B5	3169 B5	3233 B4	3276 B7	3812 E8	4160 B8	6162 B8	7260 B7	9013 B8	9029 C3	9045 D2	9064 F9
1230 B4	2162 C9	2260 B7	3094 B1	3140 D7	3170 D9	3234 B4	3277 D9	3813 C7	4190 D5	7090 D1	7261 D8	9014 D4	9030 D4	9046 D2	9065 F9
2090 B1	2163 C9	2261 B8	3095 B1	3141 D9	3171 D9	3235 C4	3280 B3	3814 C8	4191 D5	7091 E2	7280 D4	9015 D8	9031 C3	9047 D2	9260 E8

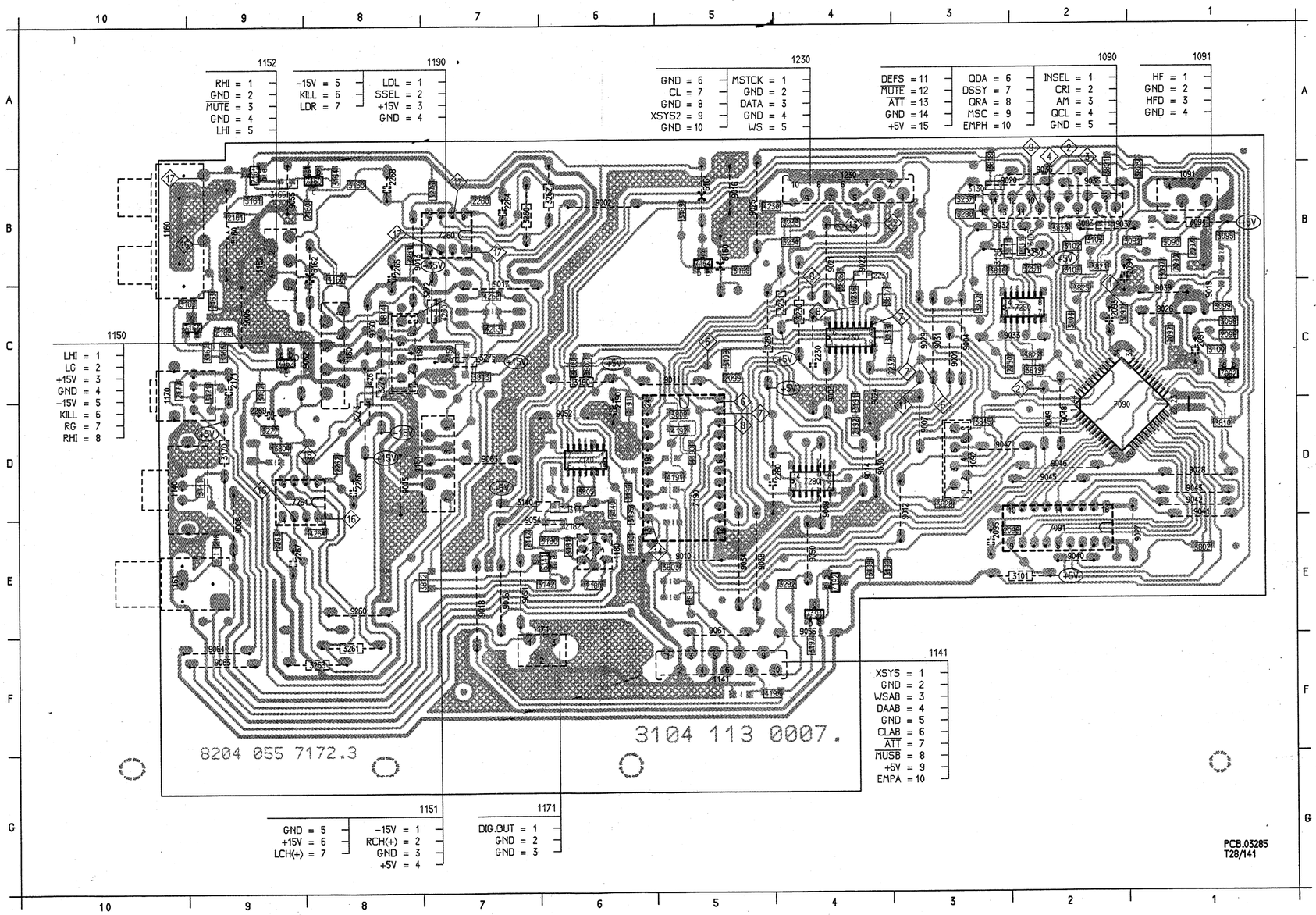

29

DECODER CIRCUIT DIAGRAM

DECODER - 2

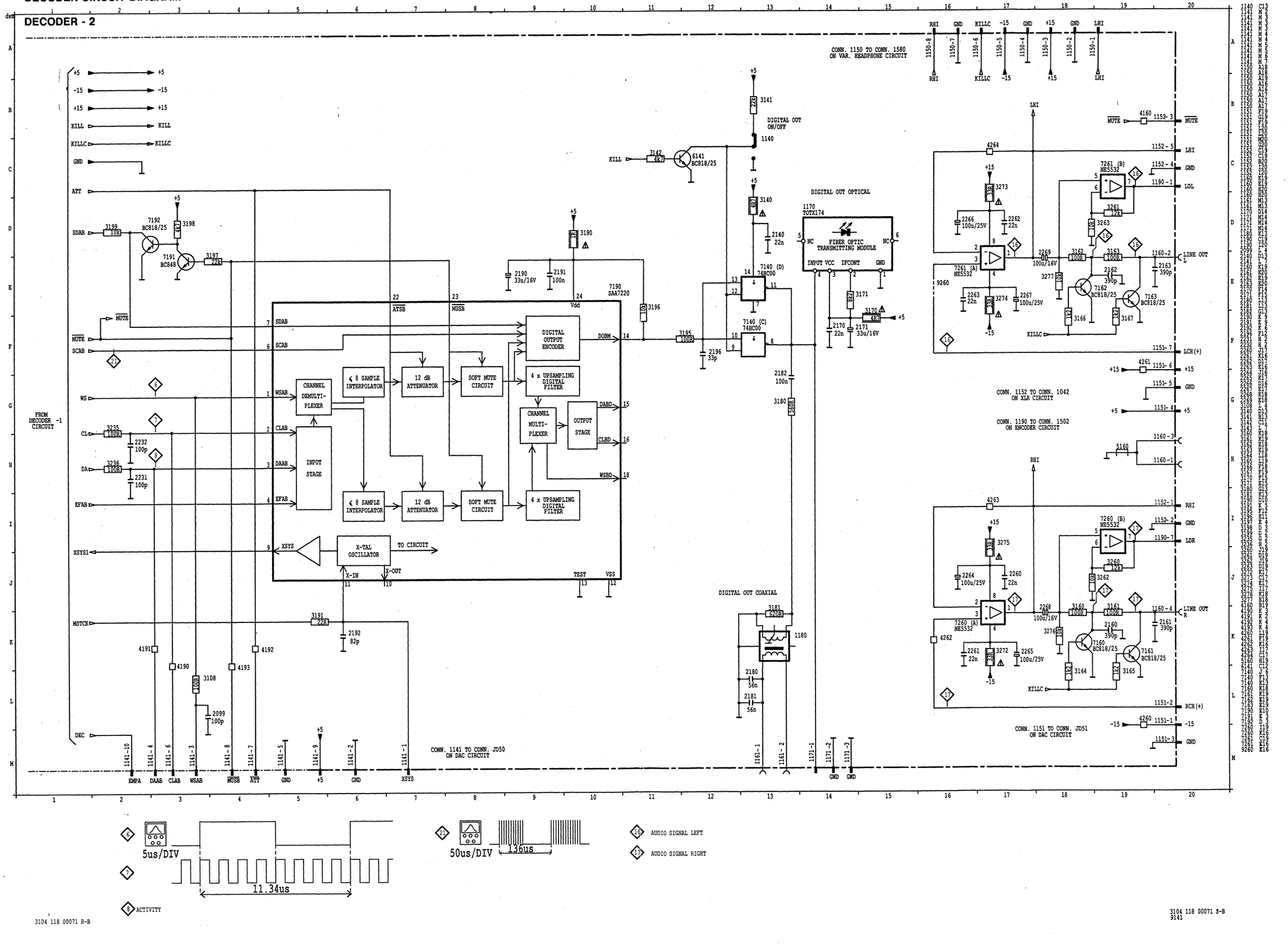

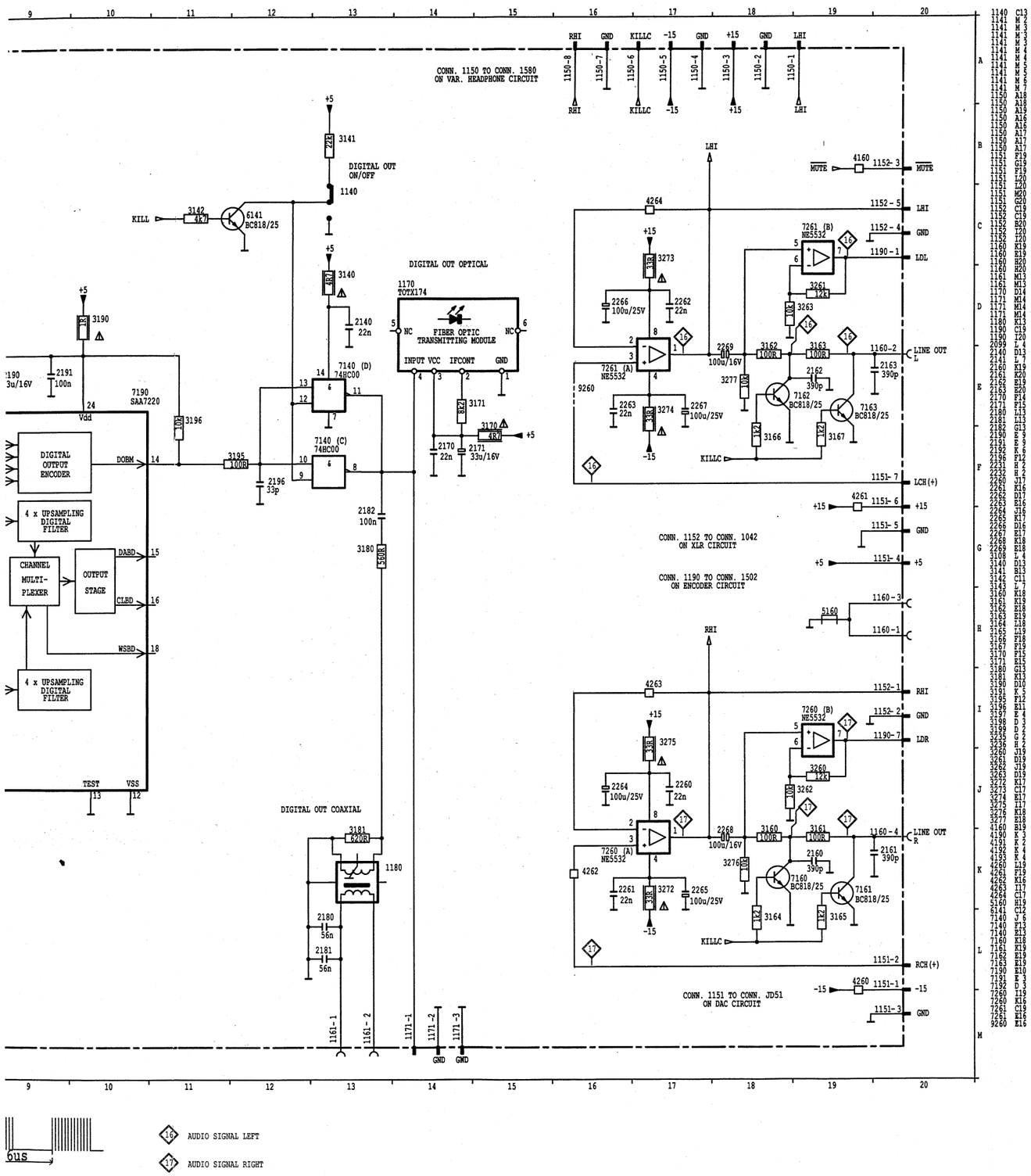

3104 118 00071 S-B
9141

DECODER-2

ATSB	- Attenuation of Audio Level in Search Position
ATT	- Attenuation
CL	- Clock Signal
CLAB	- Clock Signal Decoder-A to Filter-B
CLBD	- Clock Signal Filter-B to DAC
DA	- Data Signal
DAAB	- Data Signal Decoder-A to Filter-B
DABD	- Data Signal Filter-B to DAC
DEC	- Deemphasis Control
DOBM	- Digital Out Signal
EFAB	- Error Flag Decoder-A to Filter-B
MUSB	- Soft Mute Signal
SCAB	- Subcode Clock Decoder-A to Filter-B
SDAB	- Subcode Data Decoder-A to Filter-B
WS	- Word Select
WSAB	- Word Select Decoder-A to Filter-B
WSBD	- Word Select Filter-B to DAC
X-IN	- Oscillator Signal in Decoder-A
X-OUT	- Oscillator Signal out Decoder-A
XSYS	- Oscillator Signal

30

BS DAC CIRCUIT DIAGRAM

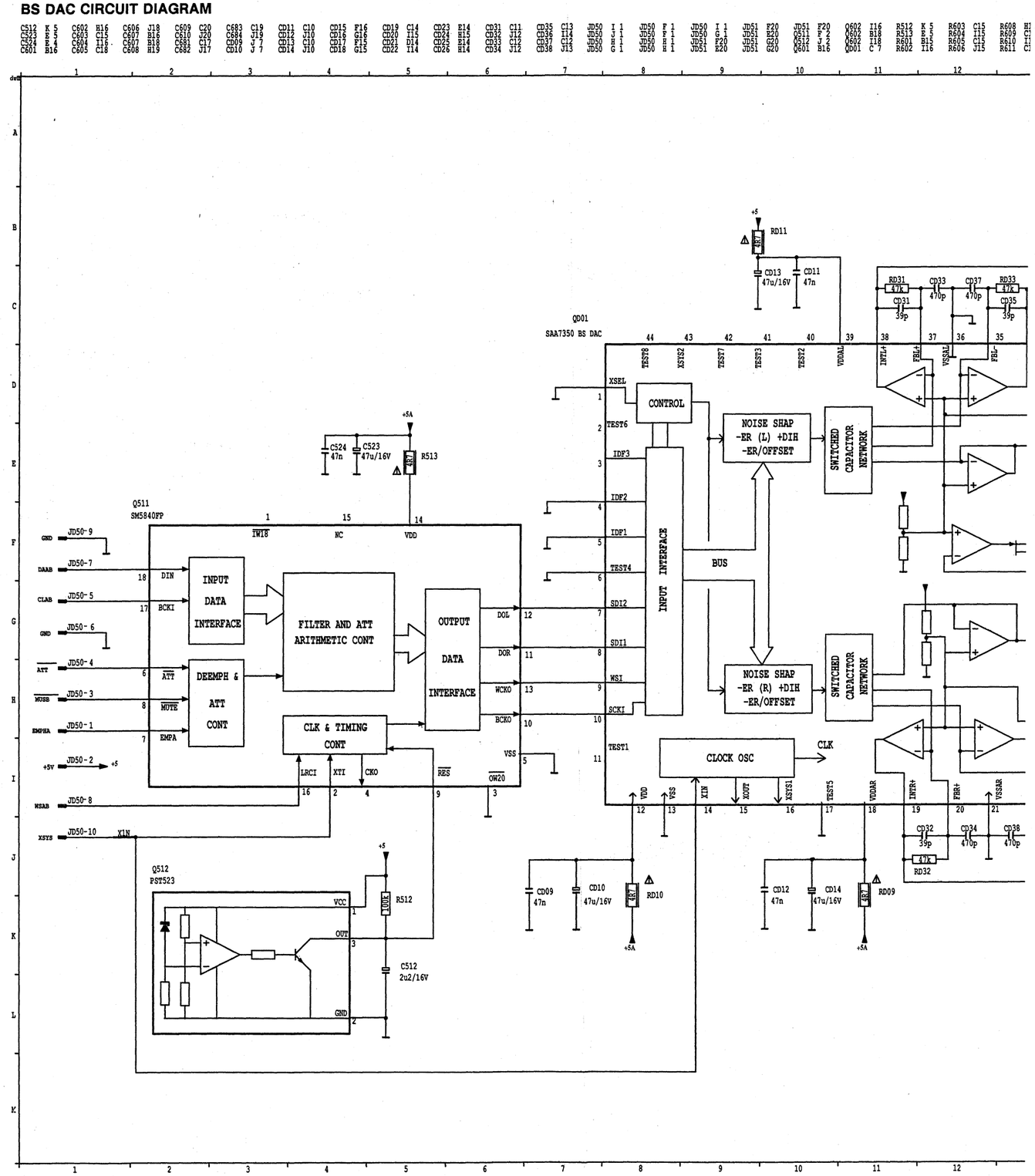

30

BS DAC CIRCUIT DIAGRAM

C512	K 5	C602	H16	C606	J18	C609	G20	C683	C19	CD11	C10	CD15	F16	CD19	C14	CD23	E14	CD31	C11	CD35	C13	JD50	I 1	JD50	F 1	JD50	I 1	JD51	F20	JD51	F20	Q602	I16	R512	K 5	R603	C15	R608	H16	R612	I18	R616	I19	R684	J18	RD12	E14	RD32	J12
C523	F 5	C603	C15	C607	B16	C610	J20	C684	J19	CD12	J10	CD16	G16	CD20	I15	CD24	H15	CD32	J12	CD36	I14	JD50	J 1	JD50	F 1	JD50	G 1	JD51	E20	JD51	E20	Q511	F 2	R513	E 5	R604	I15	R609	C17	R613	I18	R681	C16	RD09	K11	RD15	F15	RD33	C13
C524	E 4	C604	I16	C607	B18	C681	C17	CD09	J 7	CD13	C10	CD17	E15	CD21	D14	CD25	E14	CD33	C12	CD37	C12	JD50	B 1	JD50	H 1	JD51	F20	JD51	G20	Q512	L 6	R601	B15	R605	C15	R610	I17	R614	H18	R682	J16	RD10	K 8	RD16	F15	RD34	I15
C601	B16	C605	C18	C608	H19	C682	J17	CD10	J 7	CD14	J10	CD18	G15	CD22	I14	CD26	H14	CD34	J12	CD38	J13	JD50	G 1	JD50	H 1	JD51	E20	JD51	G20	Q601	C 7	R602	I16	R606	J15	R611	C18	R615	C19	R683	D18	RD11	B10	RD31	C11	XIN	J 1

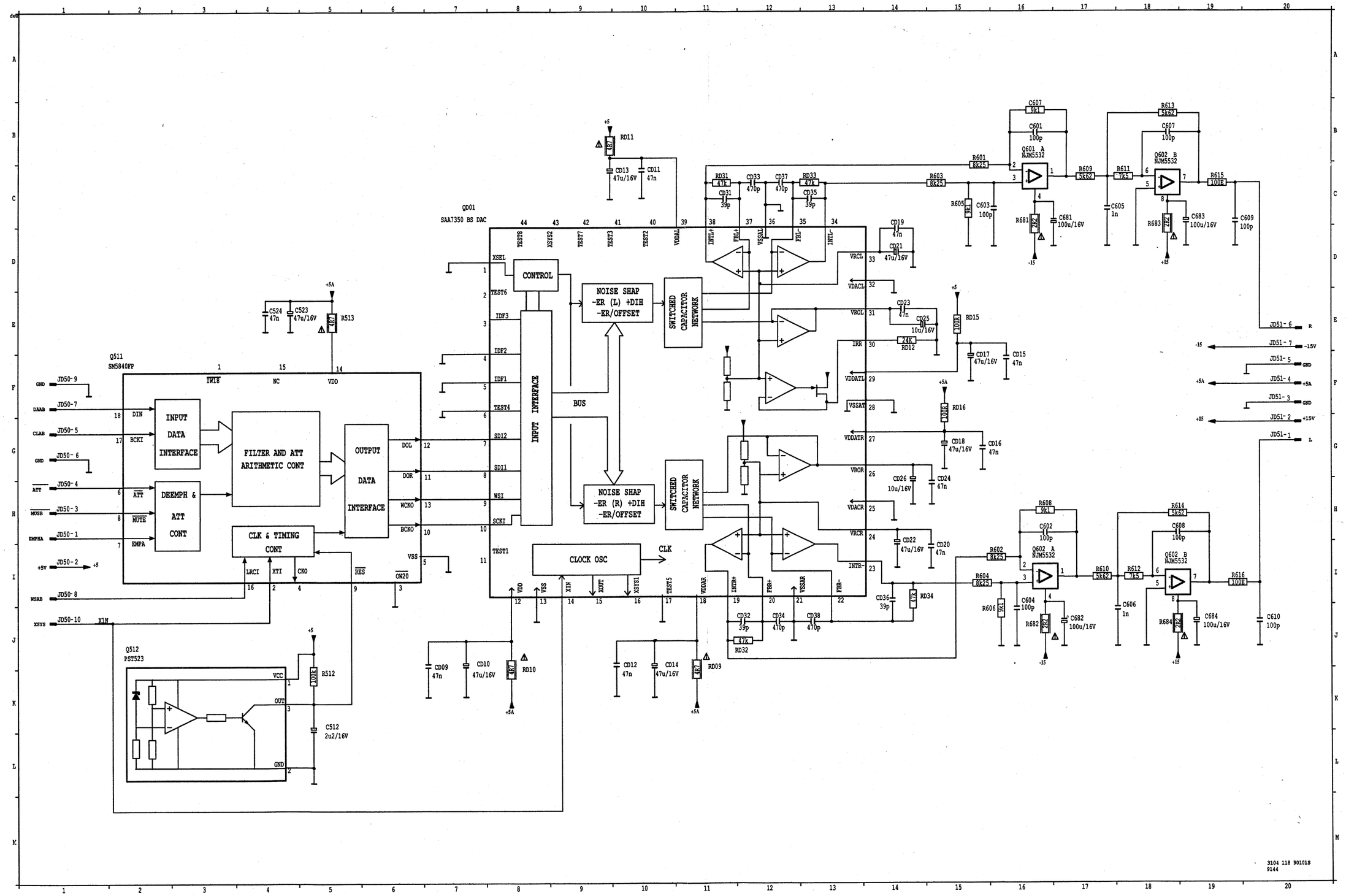

31

BS DAC PANEL

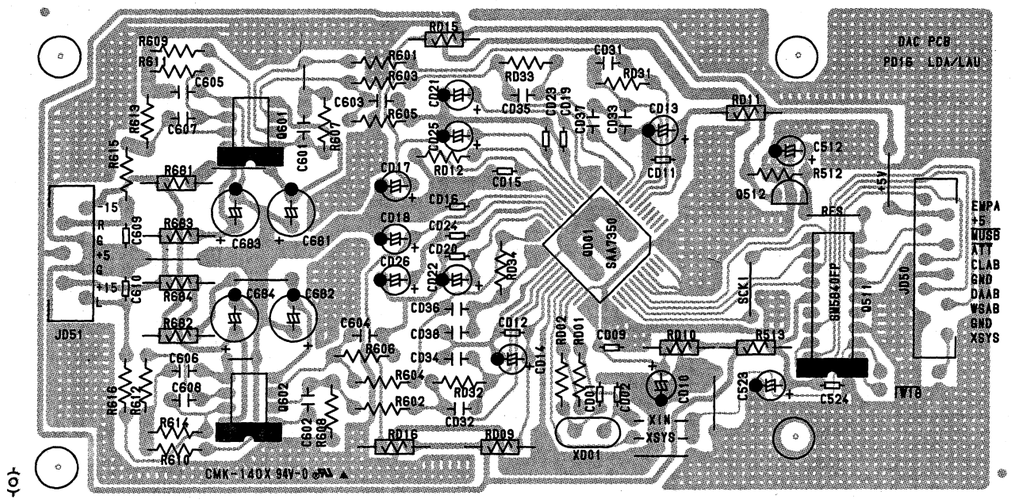

32

CONTROL AND DISPLAY CIRCUIT DIAGRAM

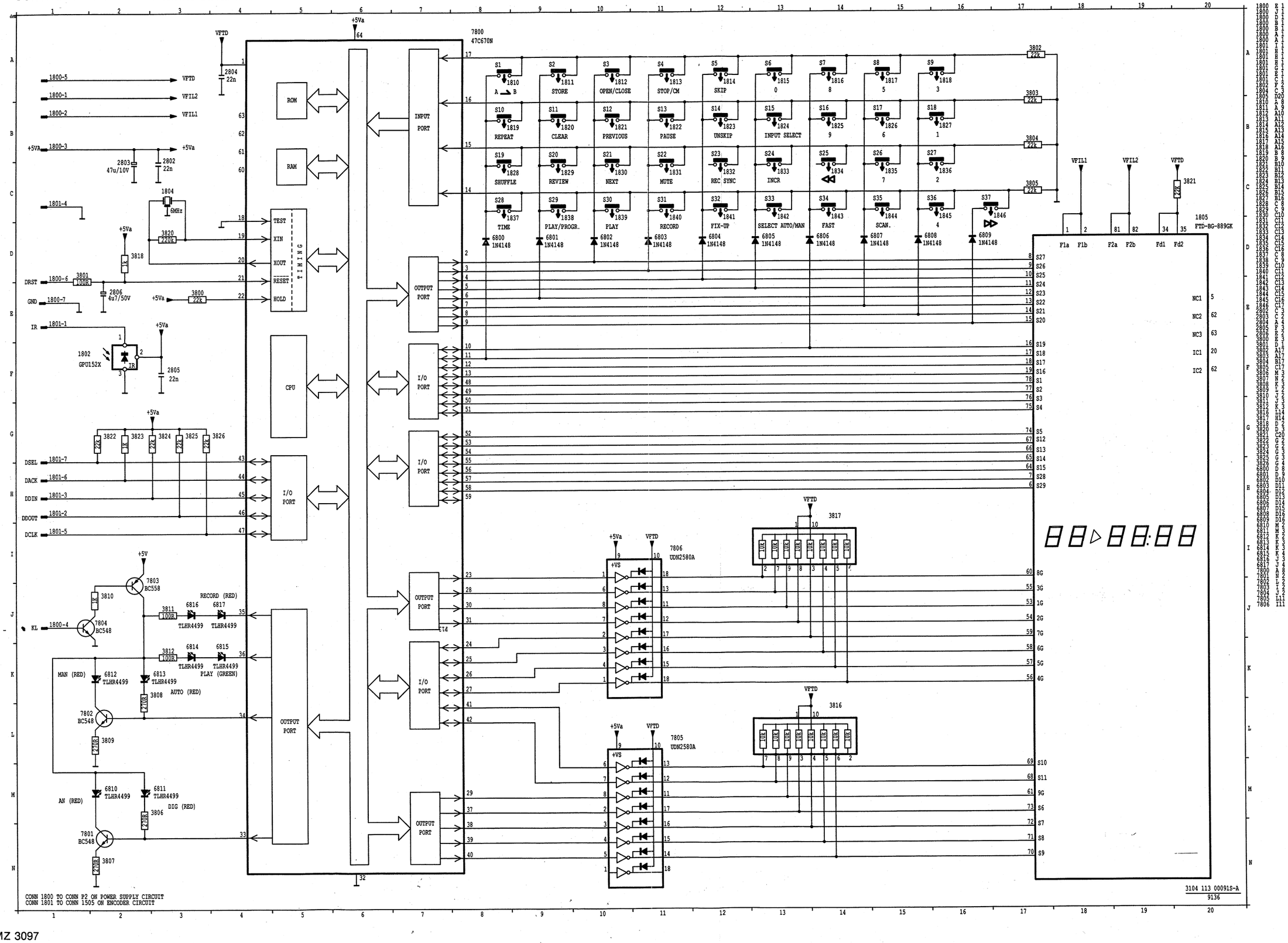

CONTROL AND DISPLAY PANEL

33

1800 C2	1815 A7	1826 A9	1835 A9	1845 A10	3803 D4	3816 D10	6800 D4	6810 A6	7802 B5	9005 D9	9015 C2	9025 A5	9035 C2
1801 D2	1816 A8	1827 A12	1836 A11	1846 B7	3804 D4	3817 E8	6801 D3	6811 A6	7803 B5	9006 D9	9016 C2	9026 A6	9036 C3
1802 D12	1817 A10	1828 B12	1837 B12	2802 C2	3805 D4	3818 E2	6802 D2	6812 A5	7804 B2	9007 D7	9017 C2	9027 A5	9045 D2
1804 E6	1818 A11	1829 A13	1838 A14	2803 C3	3806 B6	3820 D6	6803 D3	6813 A5	7805 D10	9008 D11	9018 B4	9028 B5	
1805 C11	1819 B11	1829 A4	1839 C3	2804 D5	3807 C6	3821 D10	6804 D3	6814 C5	7806 D8	9009 D3	9019 B5	9029 A7	
1810 B10	1820 A13	1830 C4	1840 B3	2805 D12	3808 B5	3822 D2	6805 D3	6815 C3	9000 D10	9010 D3	9020 B5	9030 D11	
1811 A12	1821 C5	1831 B4	1841 A3	2806 D2	3809 C5	3823 D2	6806 D4	6816 B3	9001 E10	9011 C4	9021 B4	9031 D12	
1812 C6	1822 B5	1832 A3	1842 A5	3800 D7	3810 B3	3824 D2	6807 D3	6817 B3	9002 D10	9012 D2	9022 B4	9032 A6	
1813 B6	1824 A7	1833 A6	1843 B8	3801 D3	3811 B3	3825 D2	6808 D4	7800 D6	9003 C4	9013 E2	9023 A3	9033 B4	
1814 A4	1825 A8	1834 B9	1844 B9	3802 D4	3812 C3	3826 D2	6809 D4	7801 B6	9004 D9	9014 C2	9024 B3	9034 C2	

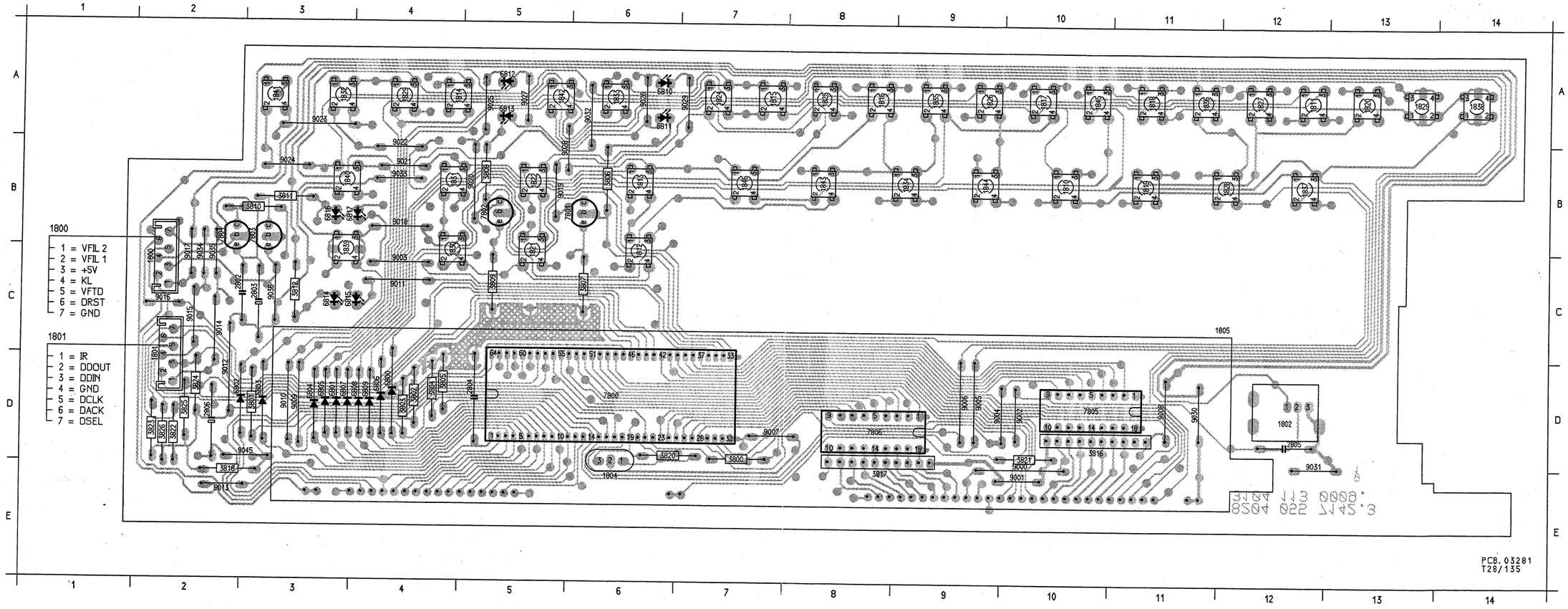

34

XLR CIRCUIT DIAGRAM

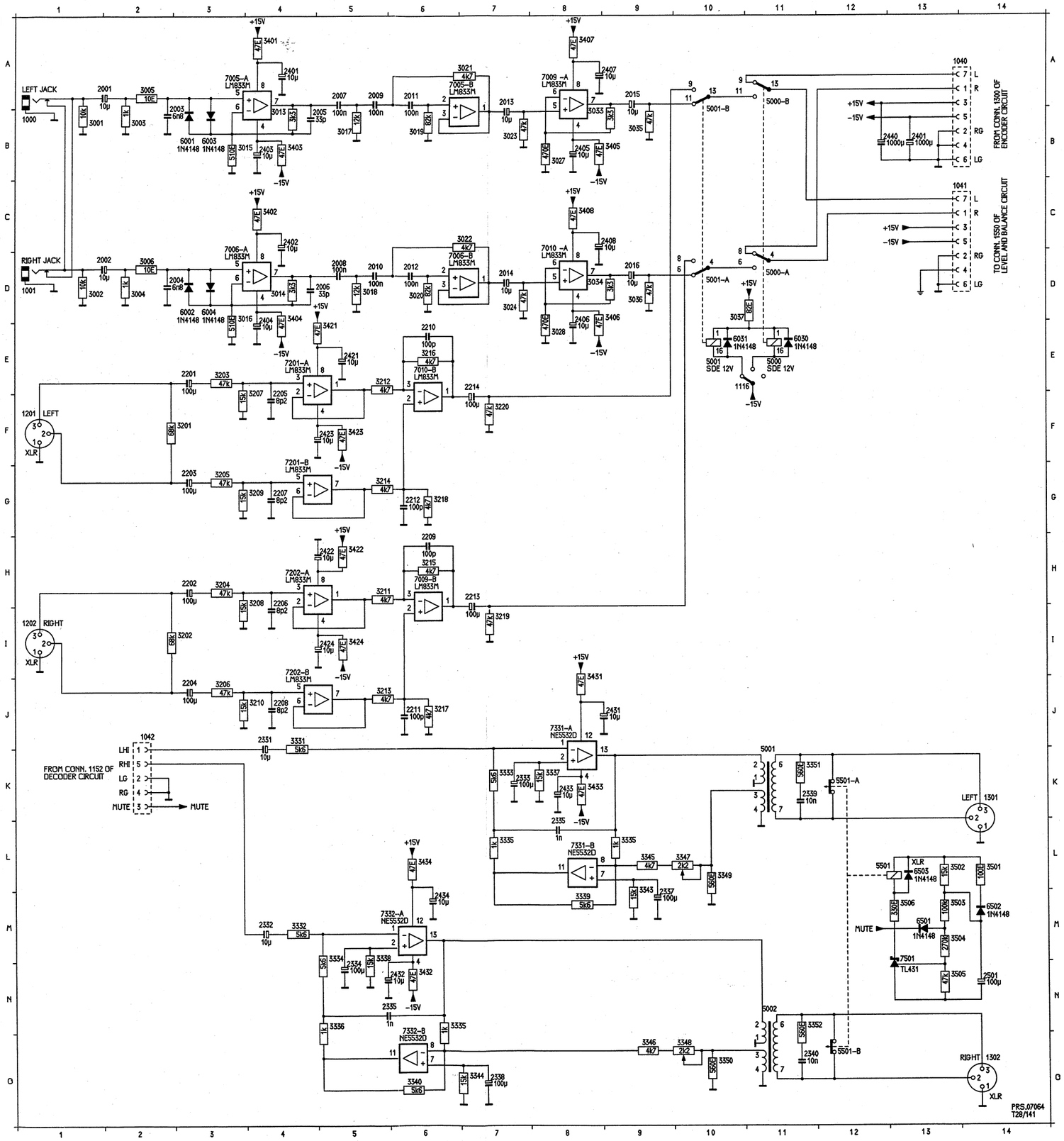

1000	B1	3431	J8
1001	D1	3432	N6
1040	A13	3433	K8
1041	C13	3434	L6
1042	J2	3501	L14
1116	E10	3502	L13
1201	F1	3503	M13
1202	I1	3504	M13
1301	K14	3505	N13
1302	O14	3506	M13
2001	A2	5000	A11
2002	D2	5000	D11
2003	B2	5000	E11
2004	D2	5001	B10
2005	B4	5001	D10
2006	D5	5001	E10
2007	A5	5001	K11
2008	D5	5002	N11
2009	A5	5501	K12
2010	D5	5501	L12
2011	A6	5501	O12
2012	D6	6001	B3
2013	A7	6002	D3
2014	D7	6003	B3
2015	A9	6004	D3
2016	D9	6030	E11
2201	E3	6031	E10
2202	H3	6501	M13
2203	K3	6502	M14
2204	J3	6503	L13
2205	F4	7005	A5
2206	H4	7005	A6
2207	G4	7006	D5
2208	J4	7006	D6
2209	H6	7009	A8
2210	E6	7009	H6
2211	J6	7010	D8
2212	G6	7010	E6
2213	H7	7201	E4
2214	E7	7201	G4
2331	J4	7202	H4
2332	M4	7202	I4
2333	K7	7331	J8
2334	M5	7331	L8
2335	N5	7332	M5
2337	M9	7332	O6
2338	O7	7501	N13
2339	K11		
2340	O11		
2401	A4		
2401	B13		
2402	C4		
2405	B4		
2404	E4		
2405	B8		
2406	E8		
2407	A9		
2408	C9		
2421	E5		
2422	H5		
2423	F5		
2424	I5		
2431	J9		
2432	N6		
2433	K8		
2434	M6		
2440	B12		
2501	N14		
3001	B1		
3002	D1		
3003	B2		
3004	D2		
3005	A2		
3006	D2		
3013	B4		
3014	D4		
3015	B3		
3016	D3		
3017	B5		
3018	D5		
3019	B6		
3020	D6		
3021	A7		
3022	C7		
3023	B7		
3024	D7		
3027	B8		
3028	E8		
3033	B8		
3034	D8		
3035	B9		
3036	D9		
3037	D10		
3201	F3		
3202	I3		
3203	E3		
3204	H3		
3205	G3		
3206	J3		
3207	F4		
3208	H4		
3209	G4		
3210	J4		
3211	H5		
3212	E5		
3213	J5		
3214	G5		
3215	H6		
3216	E6		
3217	J6		
3218	G6		
3219	I7		
3220	F7		
3331	J4		
3332	M4		
3333	K7		
3334	M5		
3335	L7		
3335	L9		
3335	N6		
3336	N5		
3337	K8		
3338	M5		
3339	M8		
3340	O6		
3345	M9		
3344	O7		
3345	L9		
3346	O9		
3347	L10		
3348	O10		
3349	L10		
3350	O10		
3351	K11		
3352	N11		
3401	A4		
3402	C4		
3403	B4		
3404	D4		
3405	B9		
3406	D9		
3407	A8		
3408	C8		
3421	E5		
3422	H5		
3423	F5		
3424	I5		

XLR PANEL COMPONENT SIDE

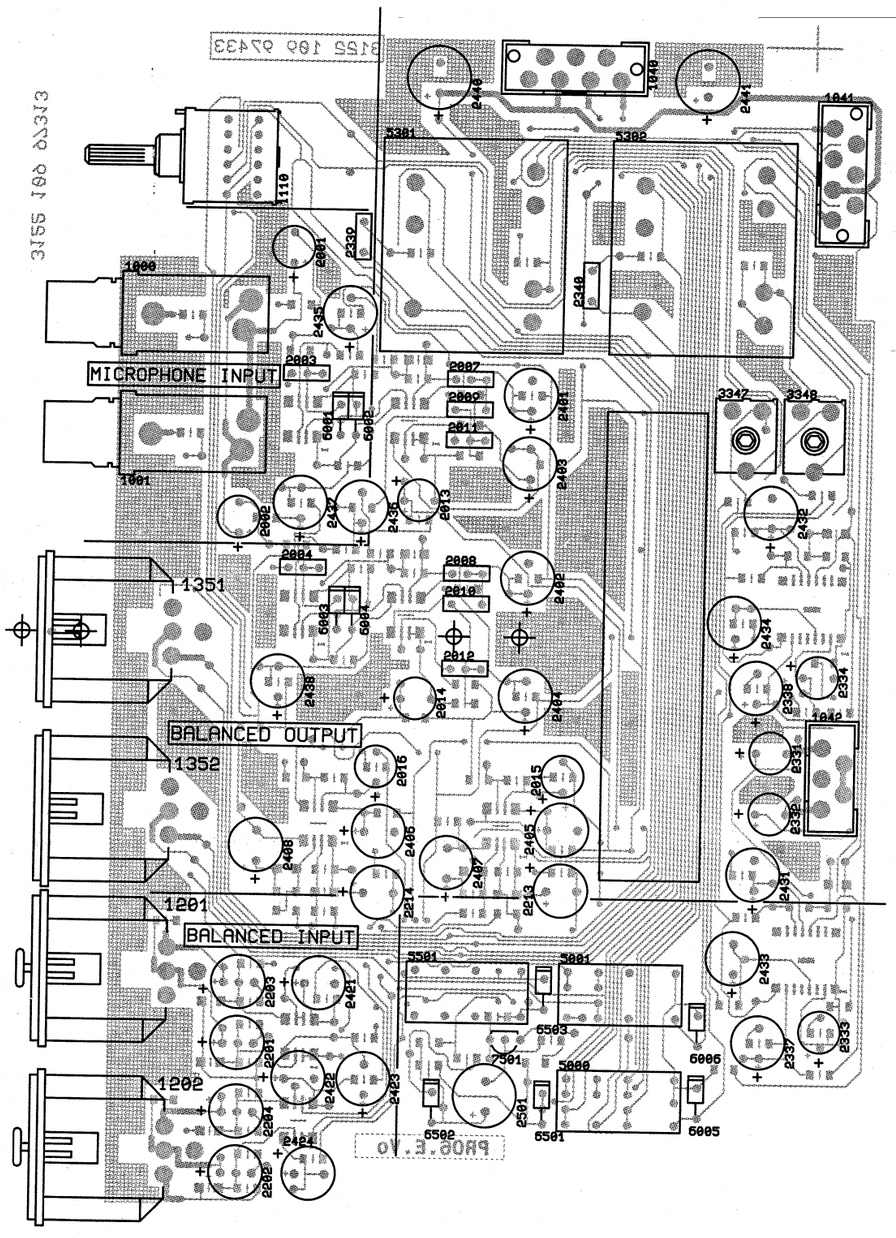

XLR PANEL SOLDER SIDE

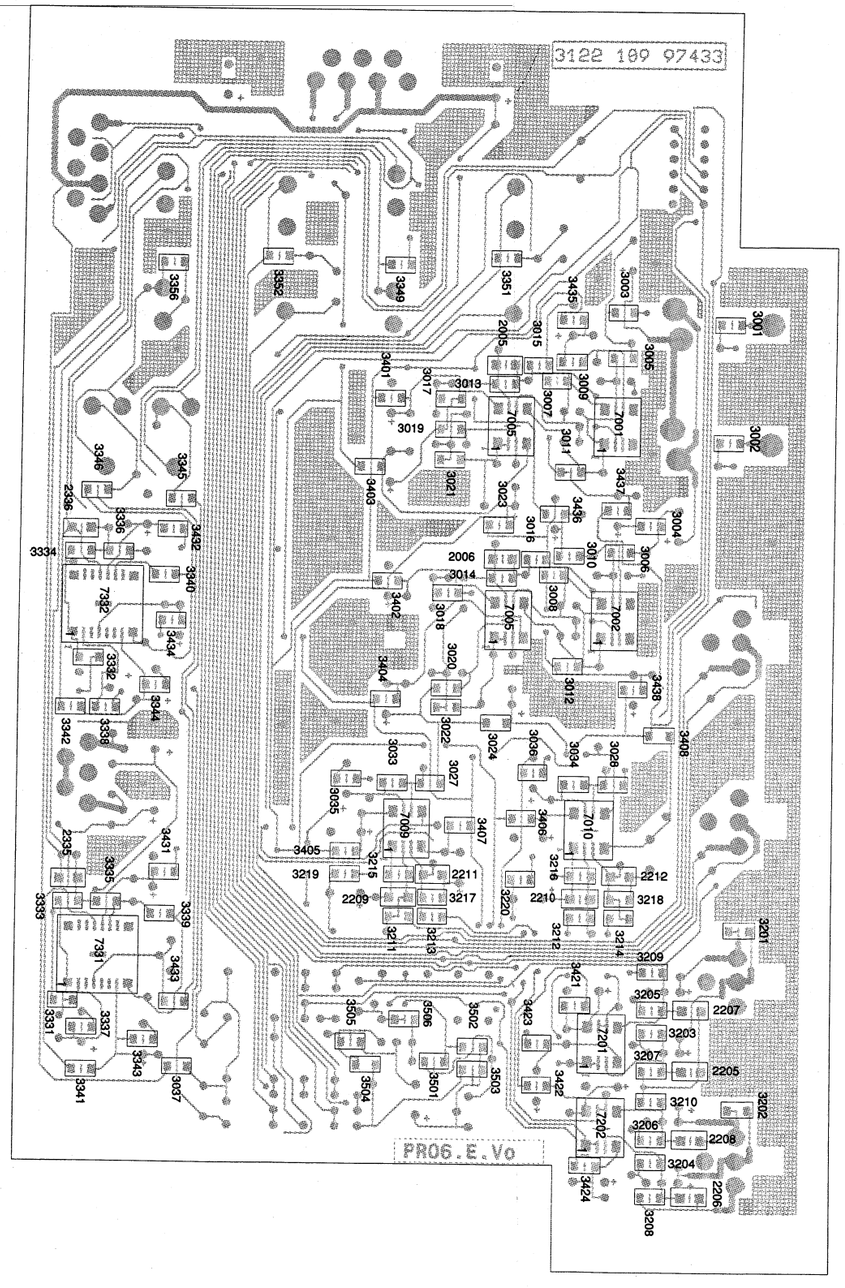

HEADPHONE CIRCUIT DIAGRAM

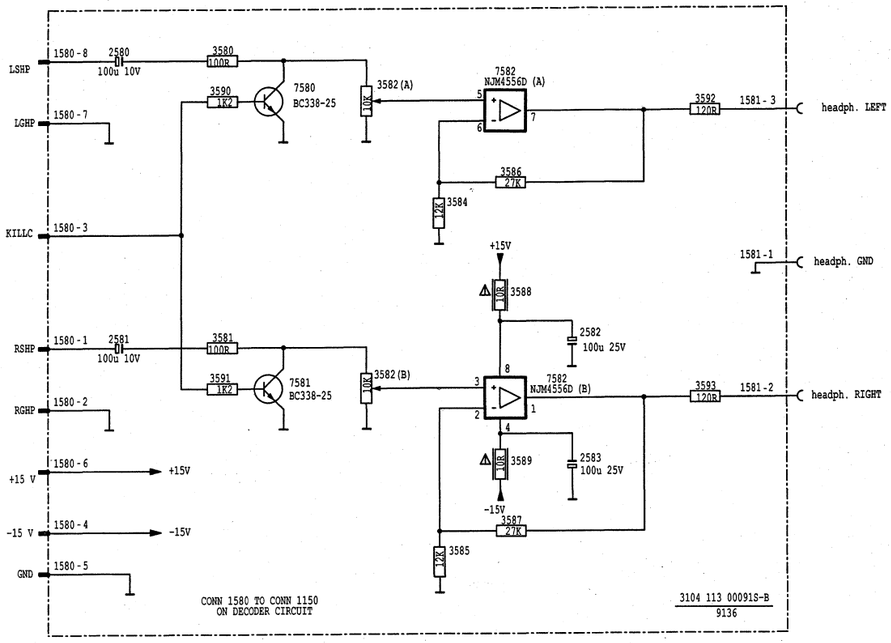

HEADPHONE PANEL

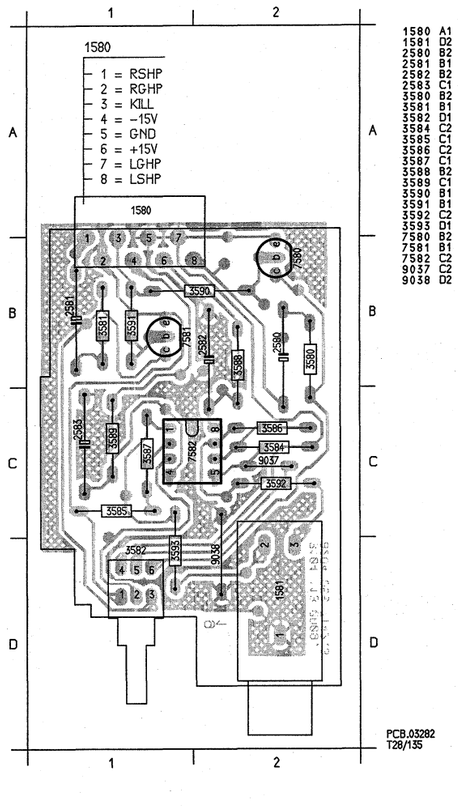

1580 A1
1581 D2
2580 B2
2581 B1
2582 B2
2583 C1
3580 B2
3581 B1
3582 D1
3584 C2
3585 C1
3586 C2
3587 C1
3588 B2
3589 C1
3590 B1
3591 B1
3592 C2
3593 D1
7580 B2
7581 B1
7582 C2
9037 C2
9038 D2

LEVEL AND BALANCE CIRCUIT DIAGRAM

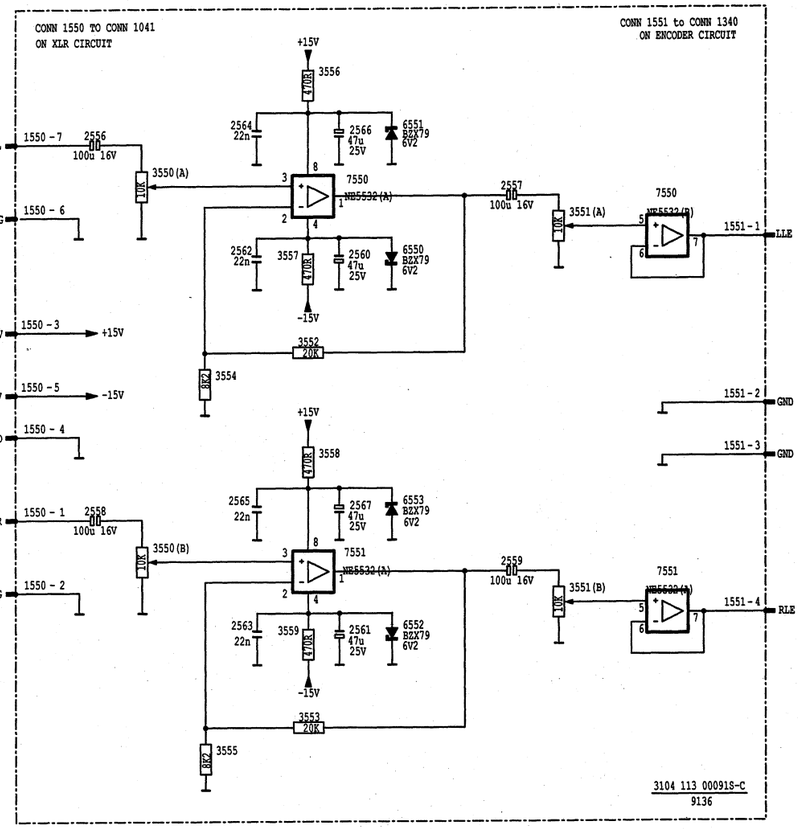

LEVEL AND BALANCE PANEL

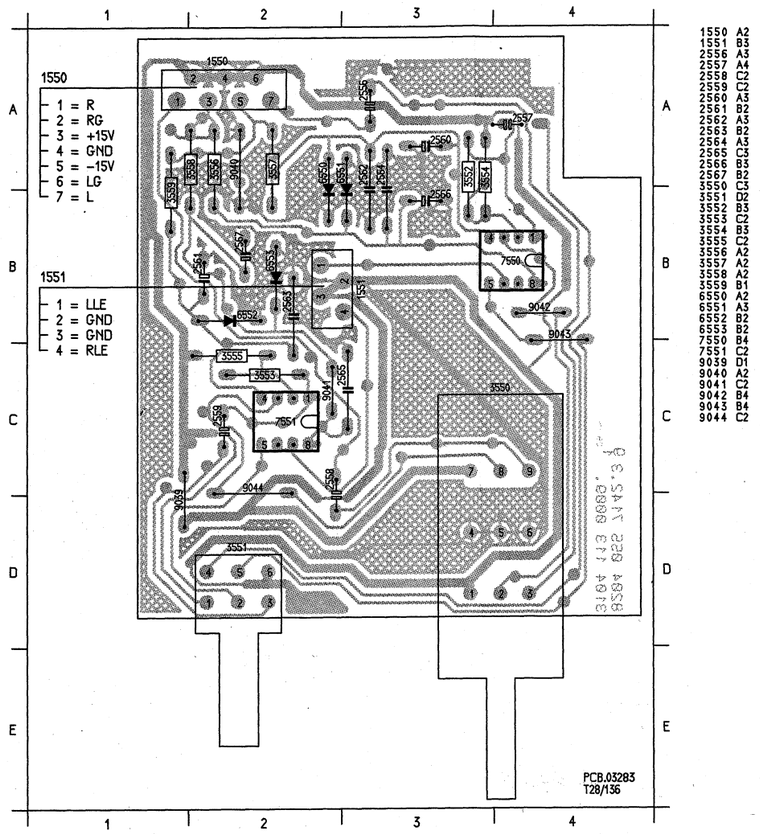

1550 A2
1551 B3
2556 A3
2557 A4
2558 C2
2559 C2
2560 A3
2561 B2
2562 A3
2563 B2
2564 A3
2565 C3
2566 B3
2567 B2
3550 C3
3551 D2
3552 B3
3553 C2
3554 B3
3555 C2
3556 A2
3557 A2
3558 A2
3559 B1
6550 A2
6551 A5
6552 B2
6553 B2
7550 B4
7551 C2
9038 D1
9040 A2
9041 C2
9042 B4
9043 B4
9044 C2

LEVEL D

1501 A 1 27
1501 E 1 27
2750 D 7 27
2751 A 7 27
2752 F 7 27

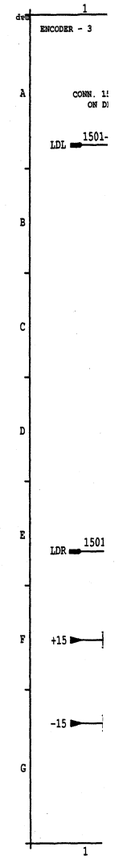

LEVEL AND BALANCE PANEL

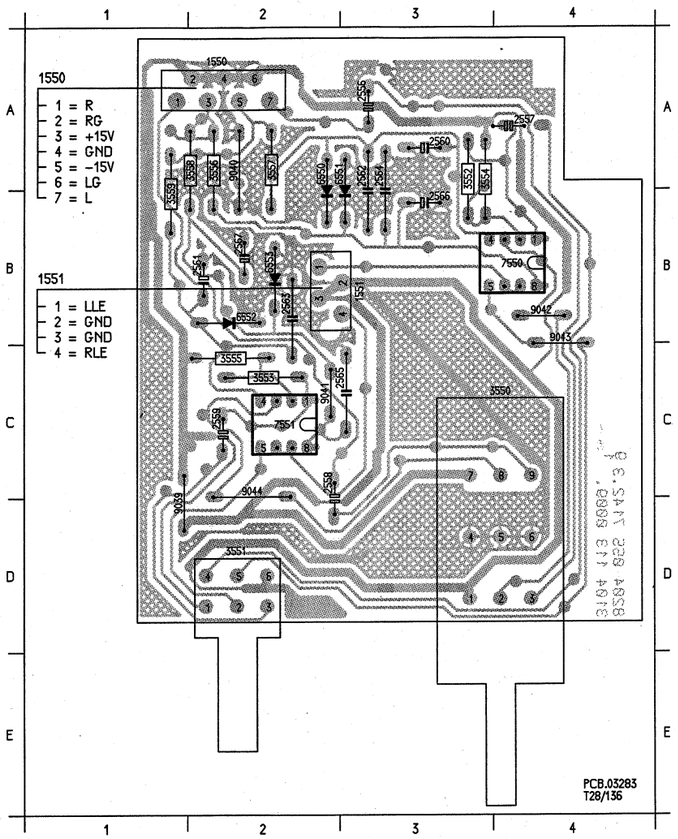

1550 A2
1551 B3
2556 A3
2557 A4
2558 C2
2559 C2
2560 A3
2561 B2
2562 A3
2563 B2
2564 A3
2565 C3
2566 B3
2567 B2
3550 C3
3551 D2
3552 B3
3553 C2
3554 B3
3555 C2
3556 A2
3557 A2
3558 A2
3559 B1
6550 A2
6551 A3
6552 B2
6553 B2
7550 B4
7551 C2
9039 D1
9040 A2
9041 C2
9042 B4
9043 B4
9044 C2

■LLE
■GND
■GND
■RLE

LEVEL DETECTION CIRCUIT DIAGRAM

1501 A 1 1501 E 1 2750 D 7 2751 A 7 2752 F 7 2753 B 7 2754 G 7 2755 D 7 2756 F 7 2757 B 7 2758 F 1 2759 G 1 2762 C 2 2763 G 2 2766 F 5 2767 G 9 2768 B 9 2769 D 3 3751 A 3 3752 D 4 3753 A 4 3754 E 5 3755 A 5 3756 F 5 3757 B 5 3758 D 6 3759 A 6 3760 G 5 3761 C 5 3762 F 6 3763 B 6 3764 E 8 3765 A 8 3766 G 8 3767 C 8 3768 F 9 3769 B 8 3770 G 9 3771 D 9 3772 F 1 3773 G 1 6750 E 4 6751 E 6 6752 A 4 6753 A 6 6754 G 6 6755 C 7 6756 G 7 6757 C 7 6758 D 4 6759 A 4 6760 G 8 6761 D 8 7750 A 4 7750 F 4 7750 E 6 7750 A 6 7751 C 6 7751 G 6 7752 E 7 7753 A 7 7754 G 7 7755 C 7

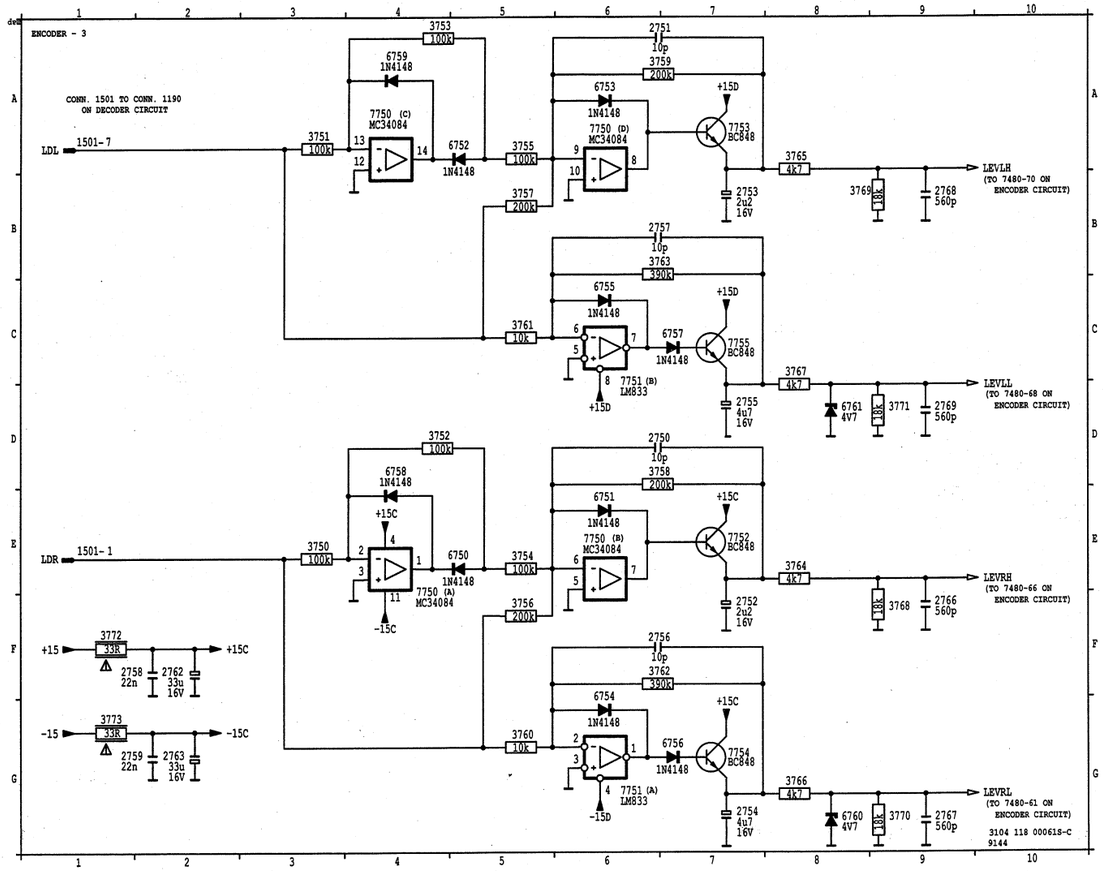

The components of this circuit diagram are situated on the ENCODER PANEL.

6

DEMOUNTING TRAYFRONT

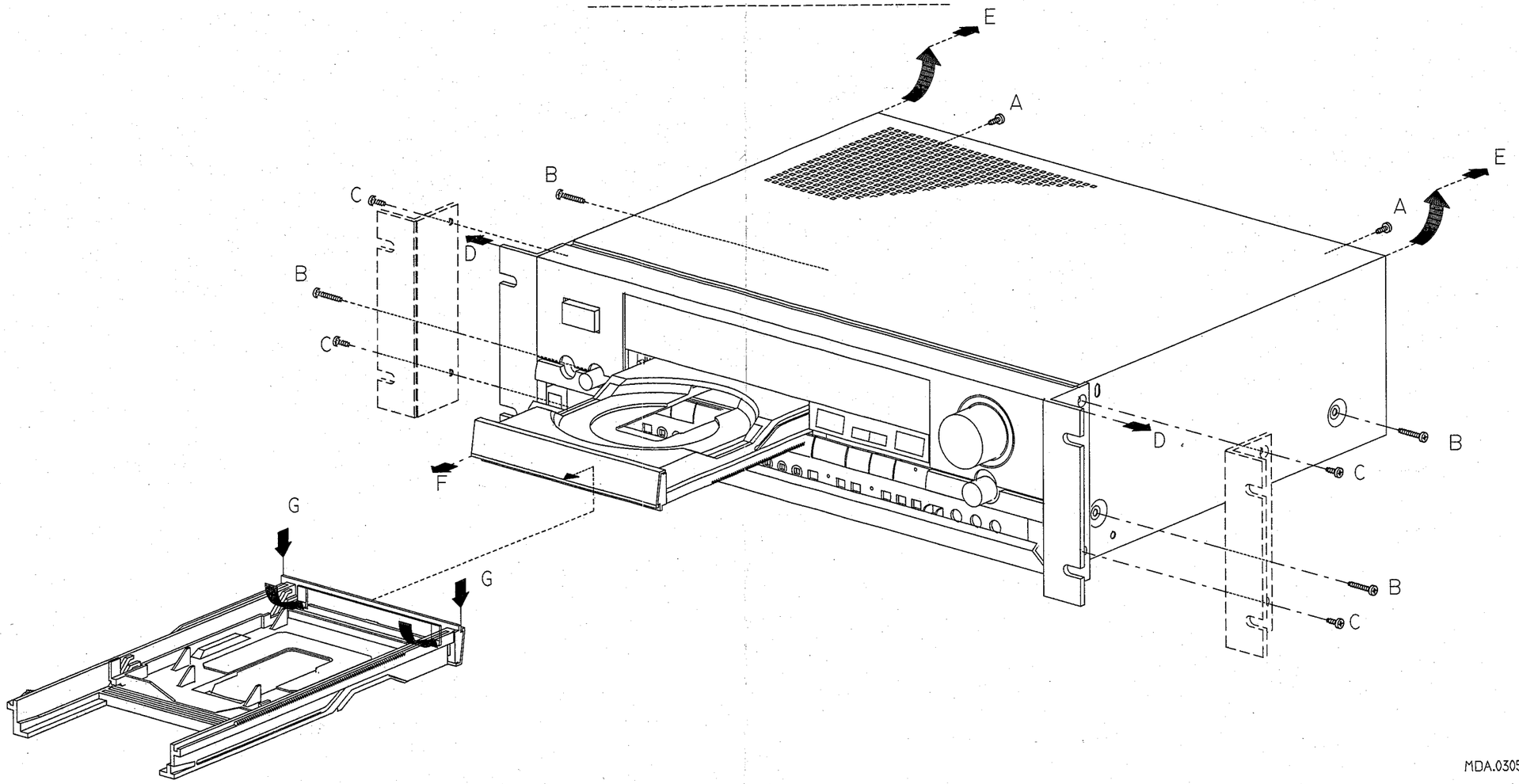

MDA.03057

7

DEMOUNTING FRONT

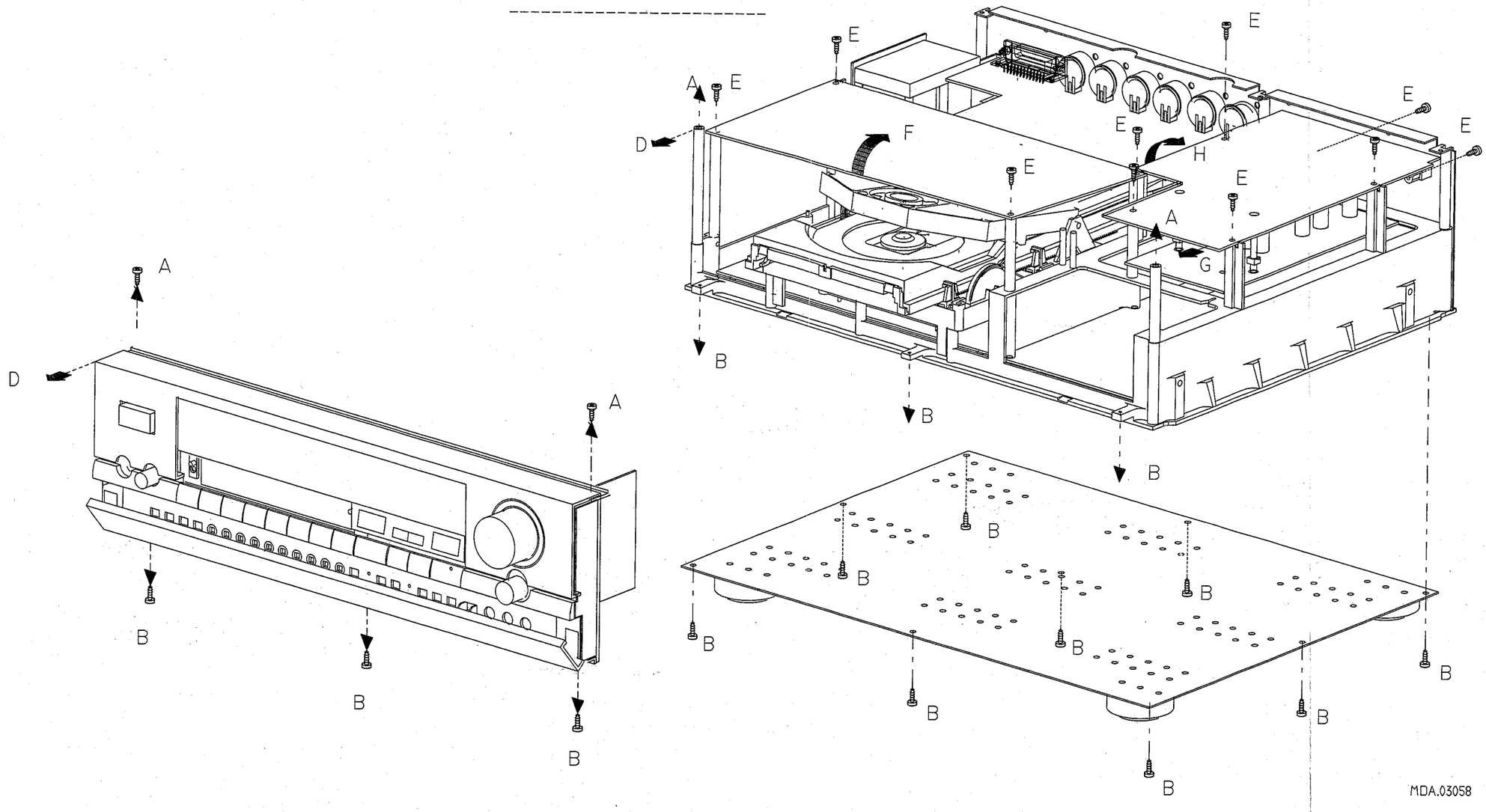

MDA.03058

8

DEMOUNTING TRAY-ASSY

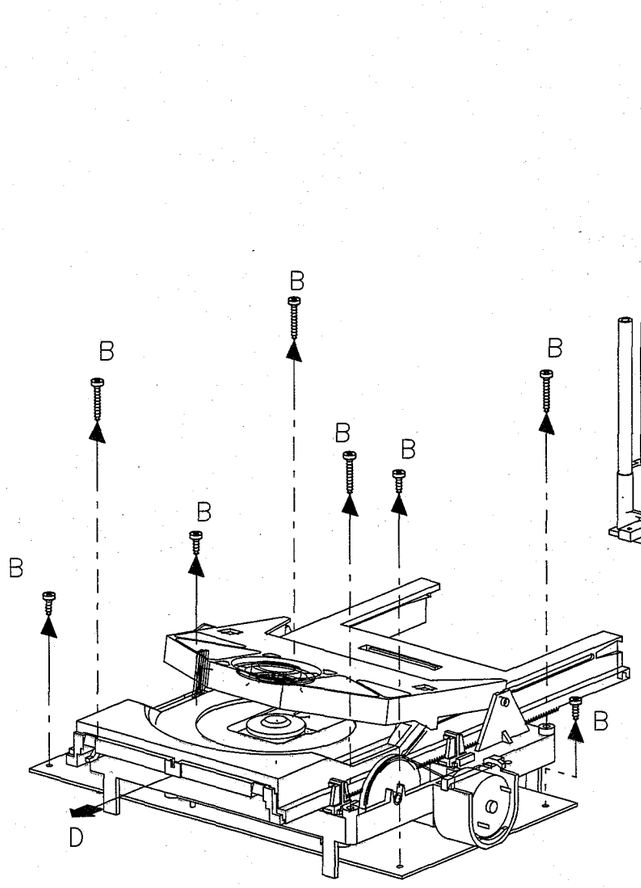

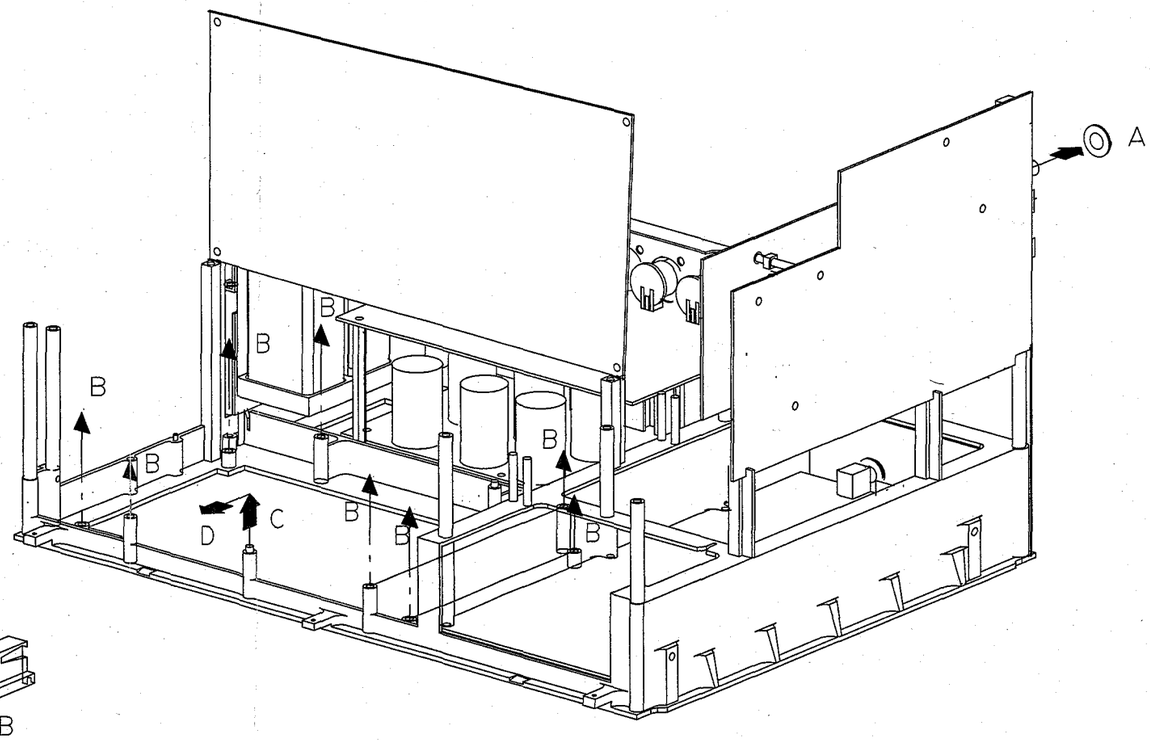

MDA.03052

DISASSEMBLY WOSP CDM

DEMOUNTING OF WOSP-PCB

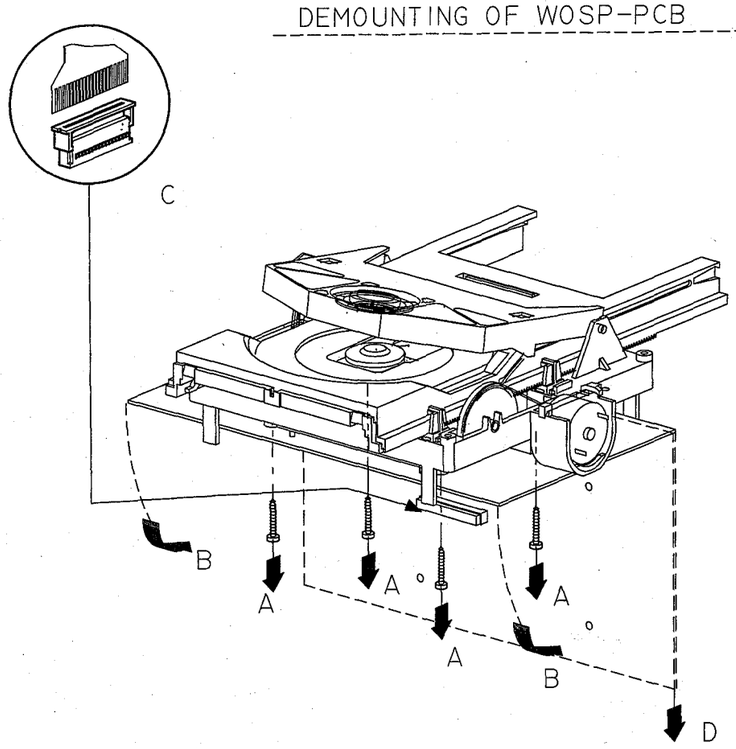

DEMOUNTING OF CDM

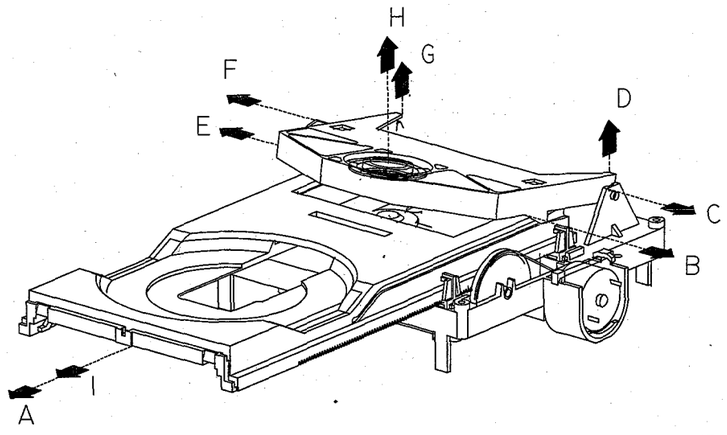

MDA.03054

SERVICE HINTS

In the set chip componens have been applied.
For disassembly and assembly of chip components see the figure below.

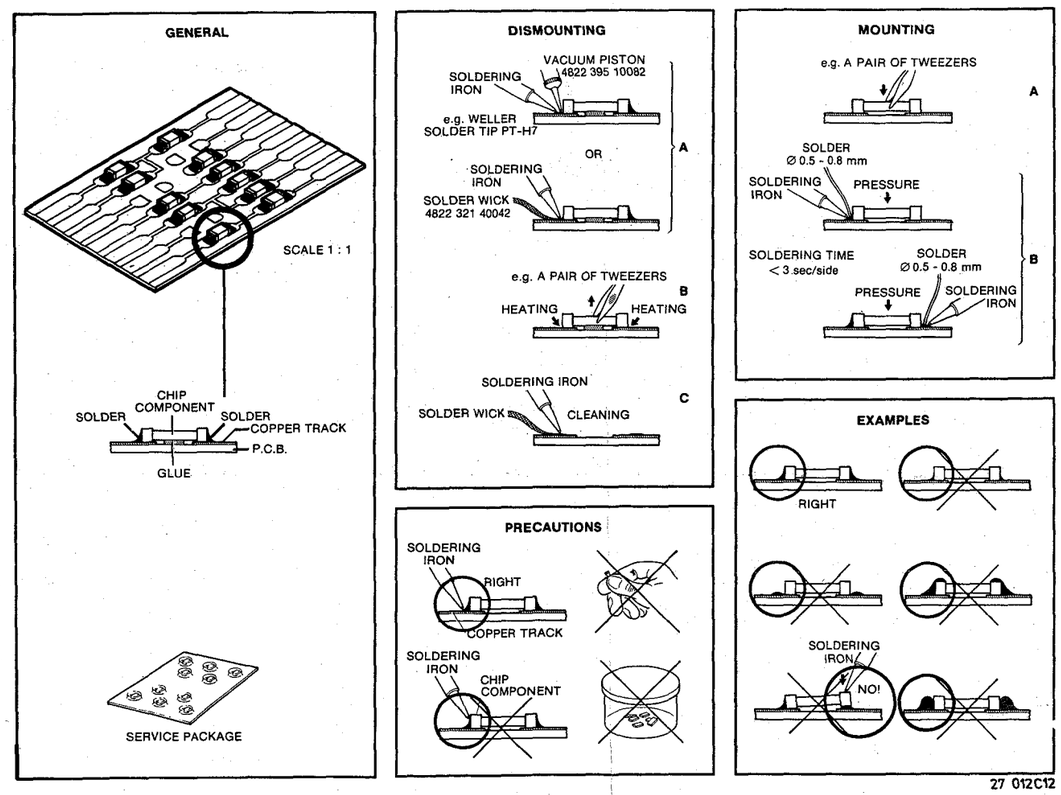

27 012C12

9

ɔmponens have been applied.
and assembly of chip components see

GENERAL

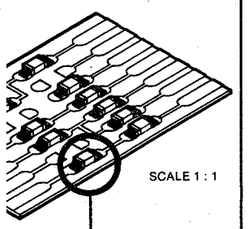

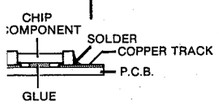

RVICE PACKAGE

DISMOUNTING

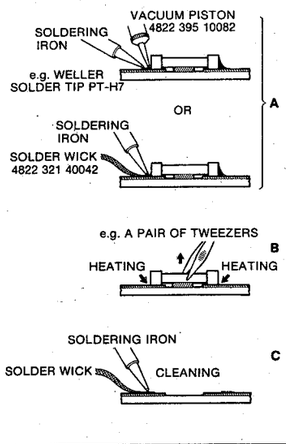

PRECAUTIONS

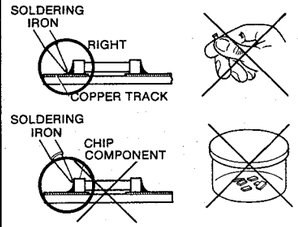

MOUNTING

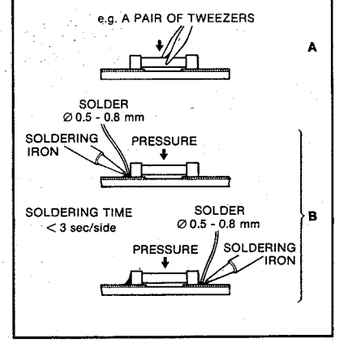

EXAMPLES

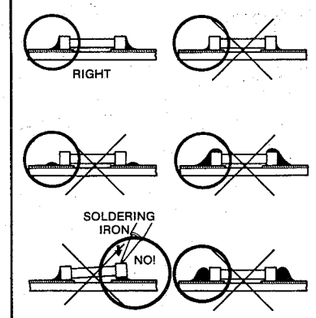

27 012C12

10

BLOCKDIAGRAM

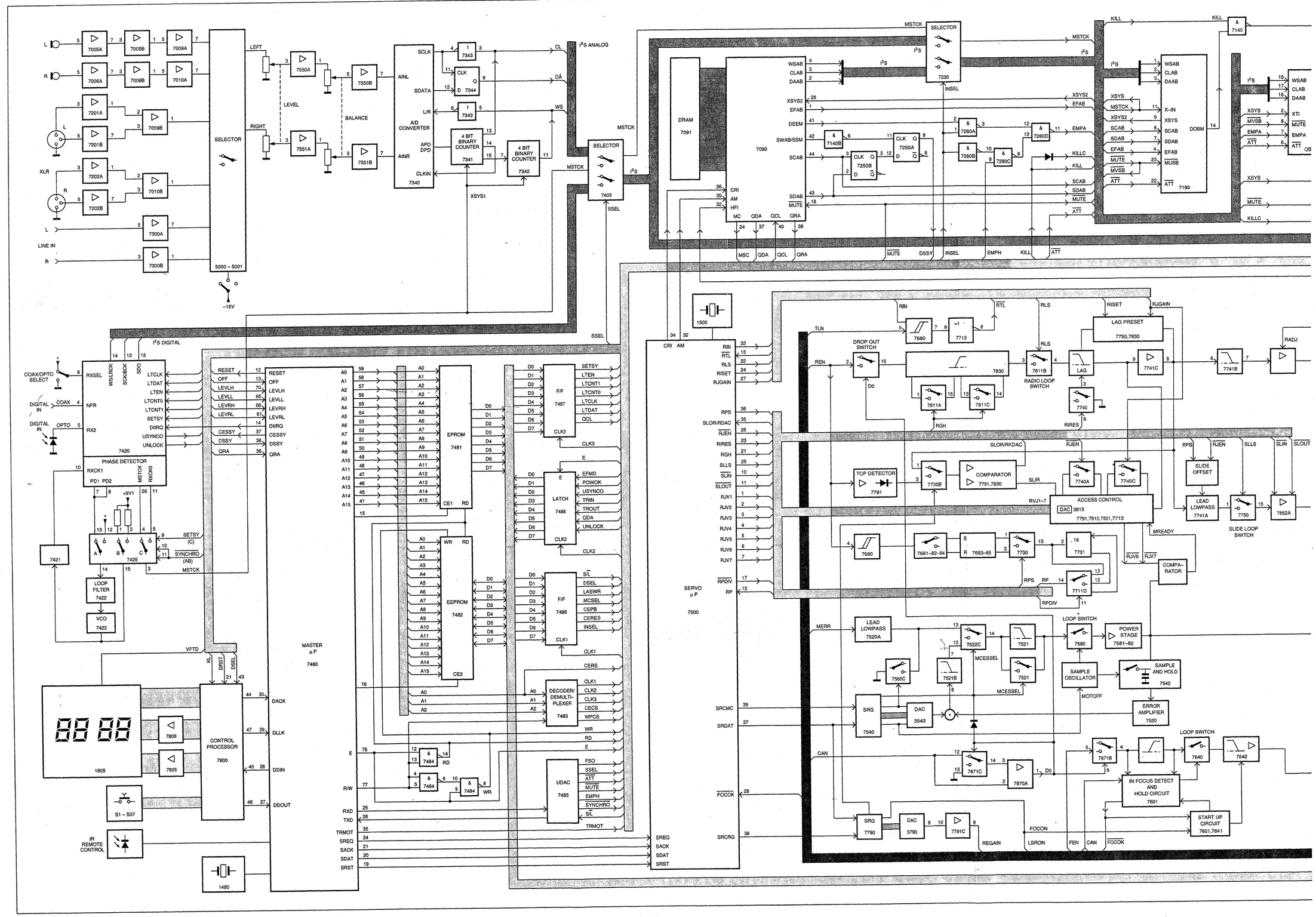

10

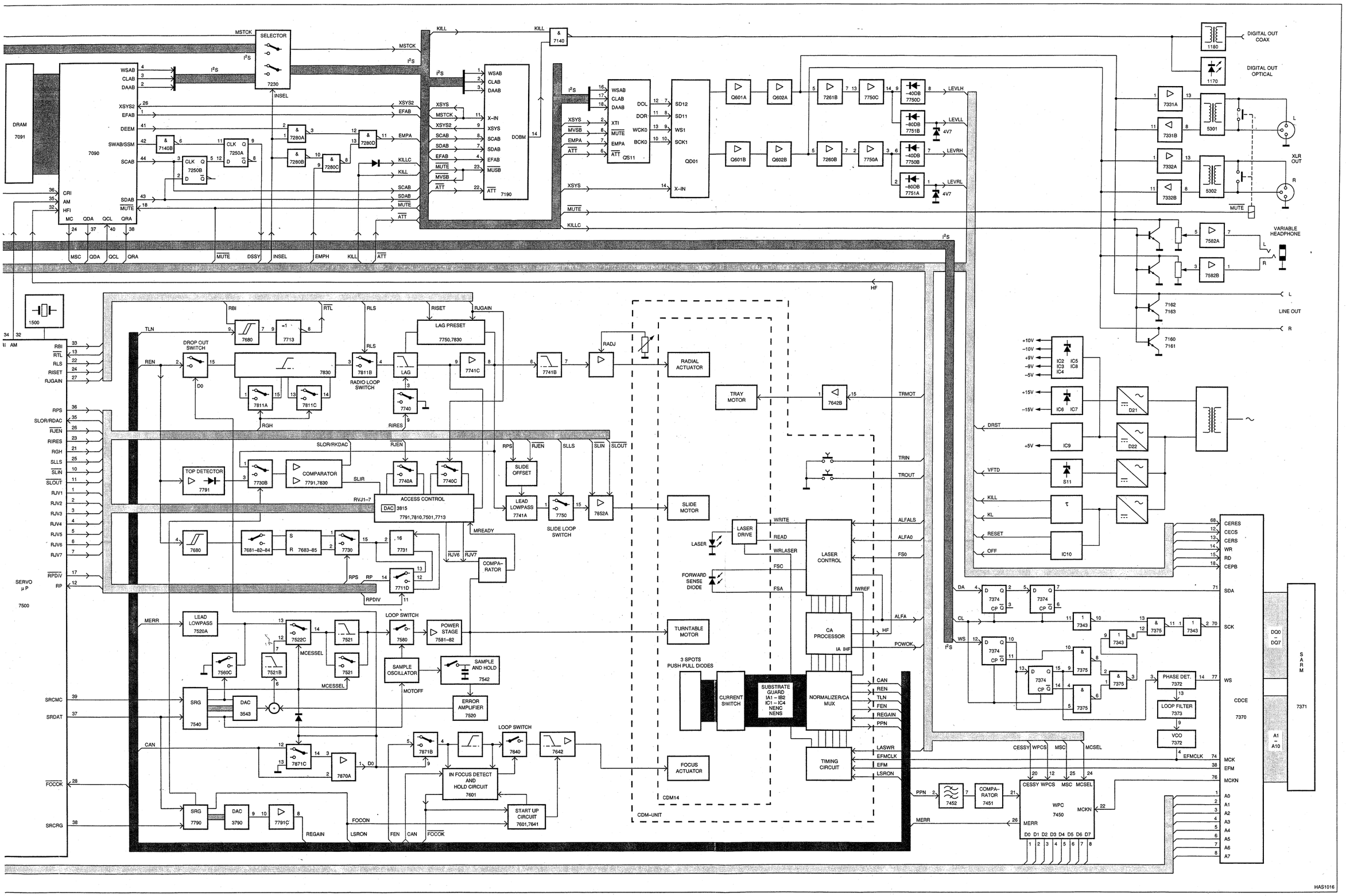

DRAM 7091
7090
SELECTOR 7230
7190
QS11
QD01
DIGITAL OUT COAX
DIGITAL OUT OPTICAL
XLR OUT
VARIABLE HEADPHONE
LINE OUT
LAG PRESET 7750,7830
DROP OUT SWITCH
RADIO LOOP SWITCH
RADIAL ACTUATOR
TRAY MOTOR
TOP DETECTOR 7791
COMPARATOR 7791,7830
ACCESS CONTROL
SLIDE OFFSET
LEAD LOWPASS 7741A
SLIDE LOOP SWITCH
SLIDE MOTOR
LASER DRIVE
LASER CONTROL
FORWARD SENSE DIODE
TURNTABLE MOTOR
CA PROCESSOR
3 SPOTS PUSH PULL DIODES
CURRENT SWITCH
SUBSTRATE GUARD IA1 – IB2 IC1 – IC4 NENC NENS
NORMALIZER/CA MUX
TIMING CIRCUIT
FOCUS ACTUATOR
CDM14
CDM-UNIT
LEAD LOWPASS 7520A
LOOP SWITCH
POWER STAGE 7581–82
SAMPLE OSCILLATOR
SAMPLE AND HOLD 7542
ERROR AMPLIFIER 7520
SRG 7540
DAC 3543
IN FOCUS DETECT AND HOLD CIRCUIT 7601
START UP CIRCUIT 7601,7641
SERVO µP 7500
CDCE 7370
SARM 7371
PHASE DET. 7372
LOOP FILTER 7373
VCO 7372
WPC 7450
COMPA-RATOR 7451
HAS1016

A0-10	- RAM Addressbus Bit 0 - 10
AINL	- Left Channel Analog Input
AINR	- Right Channel Analog Input
AINT	- Absorption Integrator
ALFA	- Actual Absorption
ALFA0	- Absorption Set
ALFALS	- Absorption Loop Switch
AM	- Additional Mute
APD	- Analog Power Down
ATT	- Attenuation
CA	- Central Apperture Signal
CAN	- Central Apperture Signal Normalized
CE	- Chip Enable
CECS	- CIRC EFM Chip Select
CEFS	- CIRC EFM Frame Sync
CEPB	- CIRC EFM Pause Bit
CERES	- CIRC EFM Reset
CERS	- CIRC EFM Register Select
CESSY	- CIRC EFM Subcode Sync
CL	- Clock
CLAB	- Clock Signal Decoder-A to Filter-B
CLK	- System Clock Input
CRI	- Counter Reset Inhit
CS	- Chip Select
D0 - 7	- Data Bus Bit 0 - 7
DA	- Data
DAAB	- Data Signal Decoder-A to Filter-B
DACK	- Display Acknowledge
DDIN	- Display Data Input
DDOUT	- Display Data Output
DEC	- Deemphasis Control
DEEM	- Deemphasis
DIIRQ	- Digital Input Interrupt Request
DO	- Drop Out
DOBM	- Digital Out Signal
DPD	- Digital Power Down
DSEL	- Display Select
DSSY	- Decoder Subcode Sync
EFAB	- Error Flag Decoder-A to Filter-B
EFM	- EFM Serial Data
EFMCLK	- Eight to Fourteen Modulation
EFMD	- Eight to Fourteen Modulation Detect
FEN	- Focus Error Normalized
FOCOK	- In Focus Signal
FOCON	- Focus On
FSA	- Forward Sense Diode Anode
FSC	- Forward Sense Diode Cathode
FSO	- Laser Power Set
GND	- Ground
HF	- High Frequency
HFI	- High Frequency Input
IA	- 3 Spot Push Pull Diode Current
IB1-2	- 3 Spot Push Pull Diode Current
IC1-4	- 3 Spot Push Pull Diode Current
IHF	- CA Current To Remainder Part Of CA Processor
INSEL	- Input Selector
IR	- Infrared Receiver Signal
IWREF	- Laser Writing Power Reference
L	- Left
L/R	- Left/Right Select
LASWR	- Laser Write/Non Read
LEVLH	- Analog Level Left High
LEVLL	- Analog Level Left Low
LEVRH	- Analog Level Right High
LEVRL	- Analog Level Right Low
LSRON	- Laser On
LTCLK	- Interface Data Bit Clock
LTCNT0-1	- Interface Control
LTDAT	- Interface Databus
LTEN	- Interface Enable
MC	- Motor Control Signal
MCK	- Master Clock
MCKN	- Master Clock NOT
MCSEL	- Motor Control Select
MERR	- Motor Control Error Signal

MREADY	- Turntable Motor Ready
MSC	- External Motor Control Input
MSTCK	- Master Clock
MUSB	- Soft Mute Signal
MUTE	- Mute Signal
NFR	- Output Level Convertor RX1
POWOK	- Laser Power OK
PPN	- Normalized Push Pull Signal
QCL	- Q-Channel Clock Signal
QDA	- Q-Channel Data Signal
QRA	- Q-channel Request Acknowledge
R	- Right
RADJ	- Radial Gain Adjust
RBI	- Radial Brake Inhibit
RD	- µP Read Signal
RD0 - 7	- RAM Databus Bit 0 - 7
REGAIN	- Radial Gain Current
REN	- Radial Error Normalized
RGH	- Radial Gain High
RIRES	- Radial Integrator Reset
RISET	- Radial Integrator Preset
RJEN	- Radial Jump Enable
RJGAIN	- Radial Jump Gain
RJV1-7	- Radial Jump Voltage
RLS	- Radial Loop Switch
RP	- Radial Polarity
RPDIV	- Radial Polarity Divider
RPS	- Radial Polarity Select
RST	- Hard Reset
RTL	- Radial Track Loss
RX1	- IEC Format Digital Audio Data Input (Coaxial Input)
RX2	- IEC Format Digital Audio Data Input (Optical Input)
RXD	- Serial Data
RXSEL	- Selection RX1 Or RX2
SACK	- Servo Acknowledge
SCAB	- Subcode Clock Decoder-A to Filter-B
SCK	- Serial Clock (IS)
SCK/BCK	- Shift/Bit Clock Audio Data
SCLK	- Serial Output Data Clock
SD0 - 1	- Serial Data (IS)
SDAB	- Subcode Data Decoder-A to Filter-B
SDAT	- Servo Data
SDATA	- Serial Data Output
SDO	- Serial Data Output Audio Databus
SETSY	- Setting Sync Signal
SLBS	- Slide Begin Switch
SLIN	- Slide Inwards Pulse
SLLS	- Slide Servo Loopswitch
SLOR/RKDAC	- Slide Outwards Request/ADC Determination Radial Amplitude
SLOUT	- Slide Outwards Pulse
SRCMC	- Shift Register Clock Motor Control
SRCRG	- Shift Register Clock Radial Gain
SRDAT	- Shift Register Data
SREQ	- Servo Request
SRST	- Servo Reset
SSEL	- Source Select
SWAB/SSM	- Subcode Word/Start-Stop Motor Signal
TLN	- Trackloss Normalized
TRIN	- Tray In Switch
TRMOT	- Tray Motor Control
TROUT	- Tray Out Switch
TX	- IEC Format Digital Data Output
TXD	- Serial Clock
TXOE	- Reset
UCH	- Subcode U Channel
UNLOCK	- Indication VCO Frequency
USYNC01	- Indication Start New Frame
WPCS	- Wobble Processor Chip Select
WR	- µP Write Signal
WRLASER	- Write Mode/Non Read Mode Laser
WS	- Word Select Signal
WS/LRCK	- Word Select Audio Data
WSAB	- Word Select Decoder-A to Filter-B
WSBD	- Word Select Filter-B to DAC
XSYS	- Oscillator Signal

12

WIRING DIAGRAM

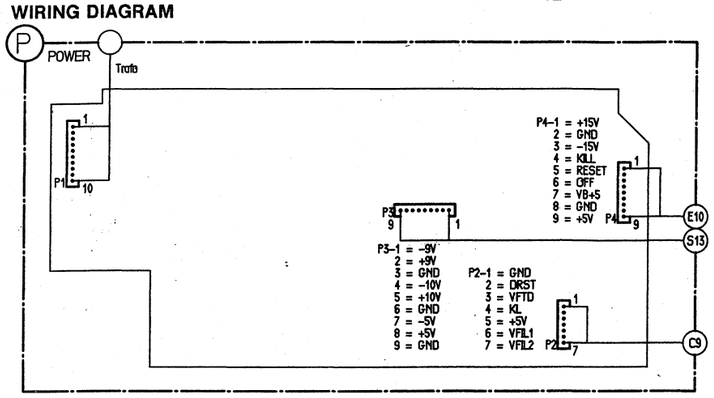

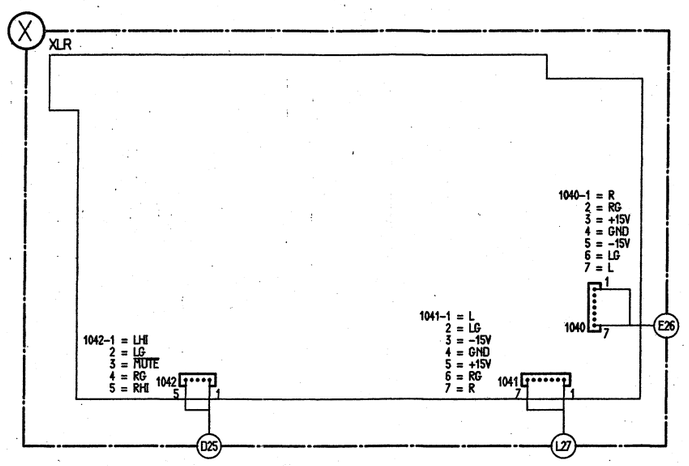

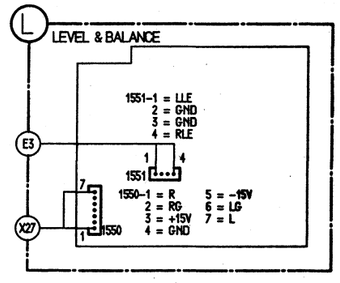

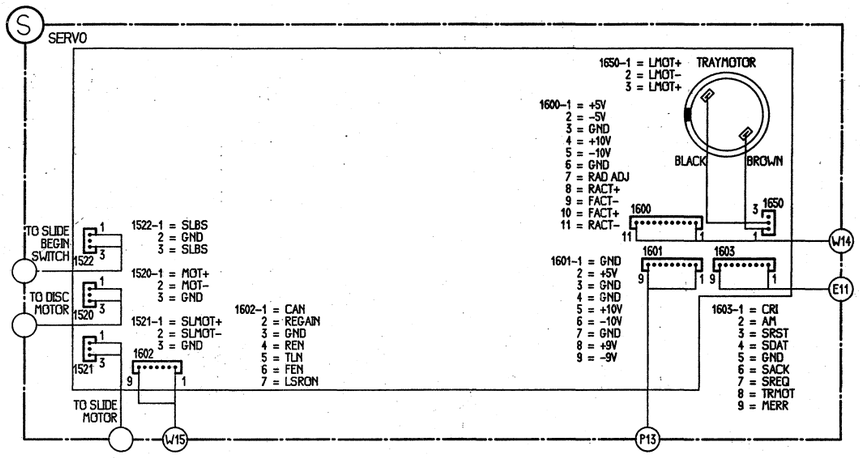

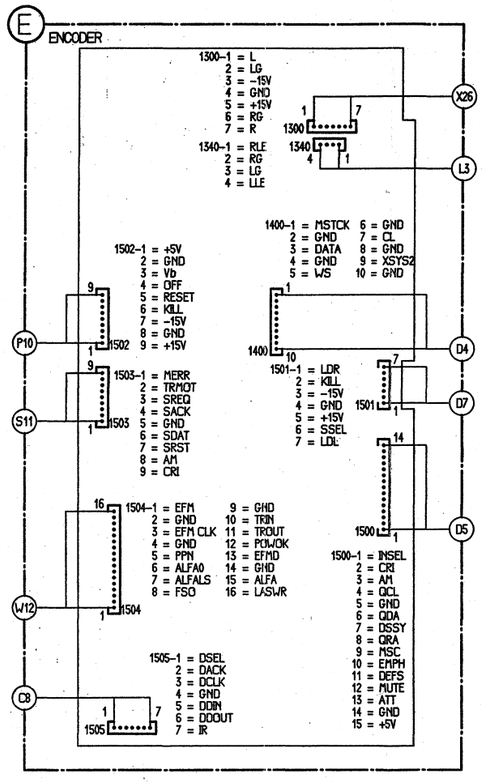

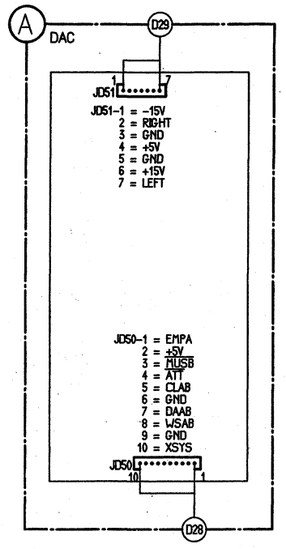

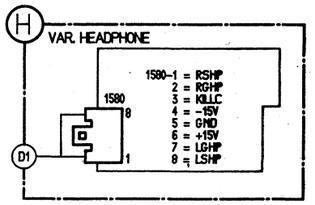

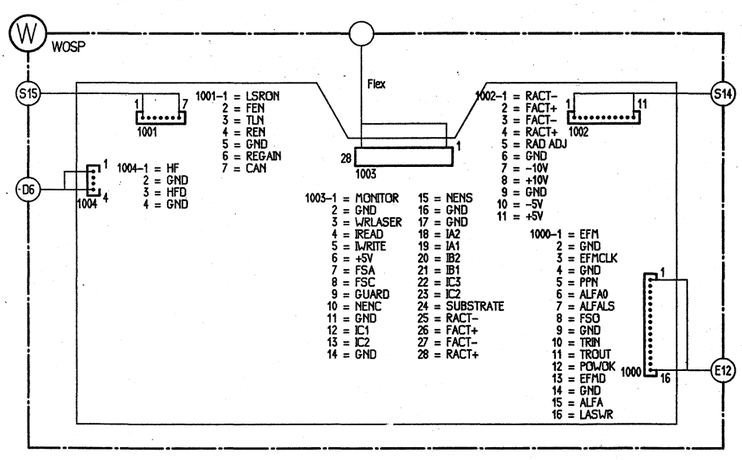

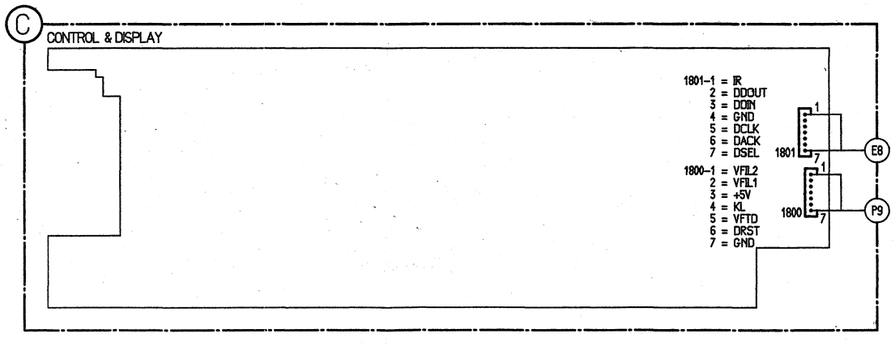

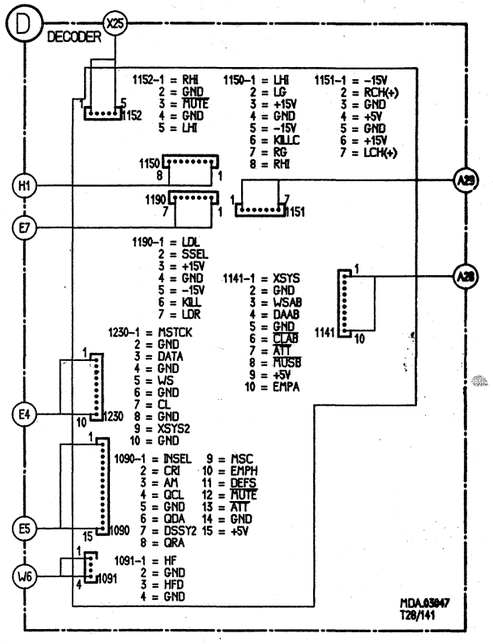

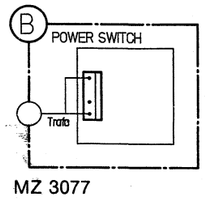

POWER SUPPLY CIRCUIT DIAGRAM

13

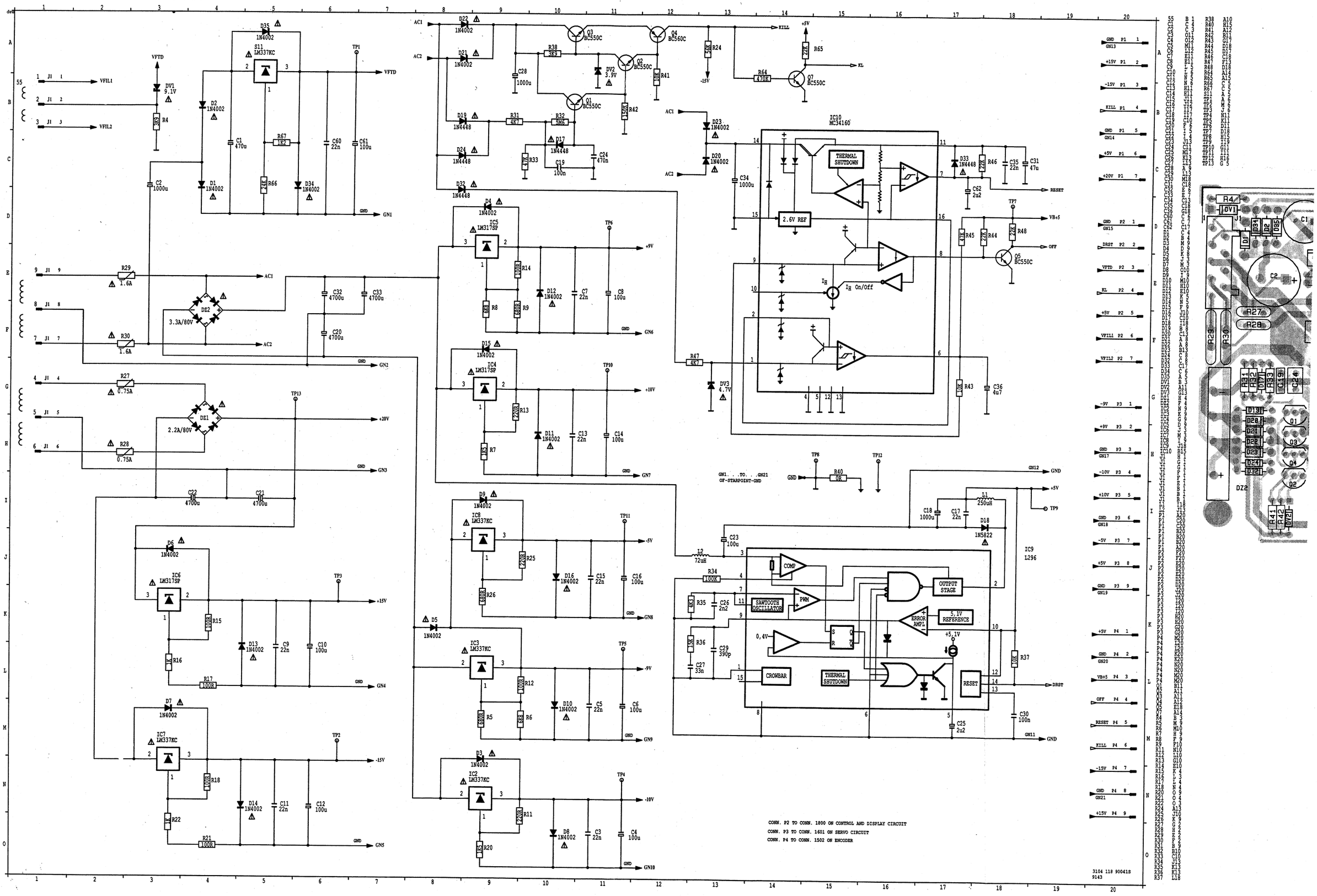

13

POWER SUPPLY PANEL

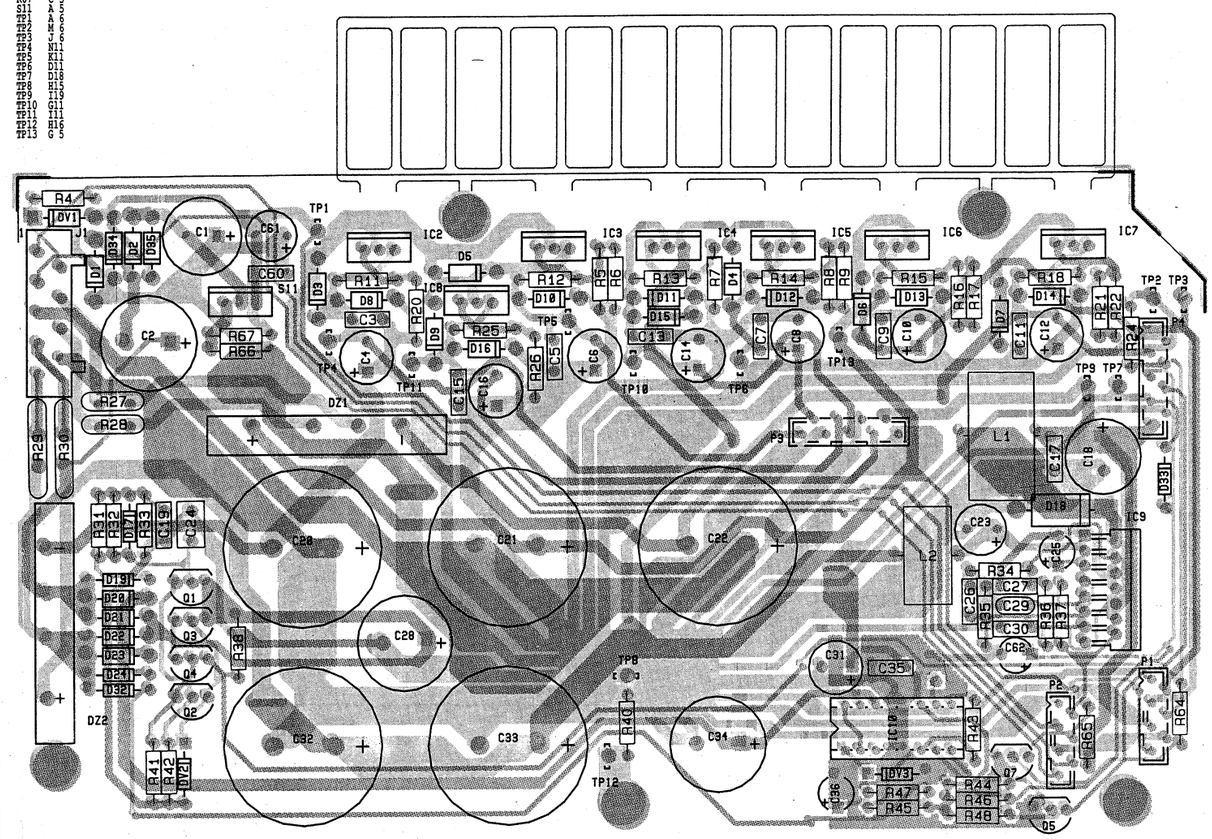

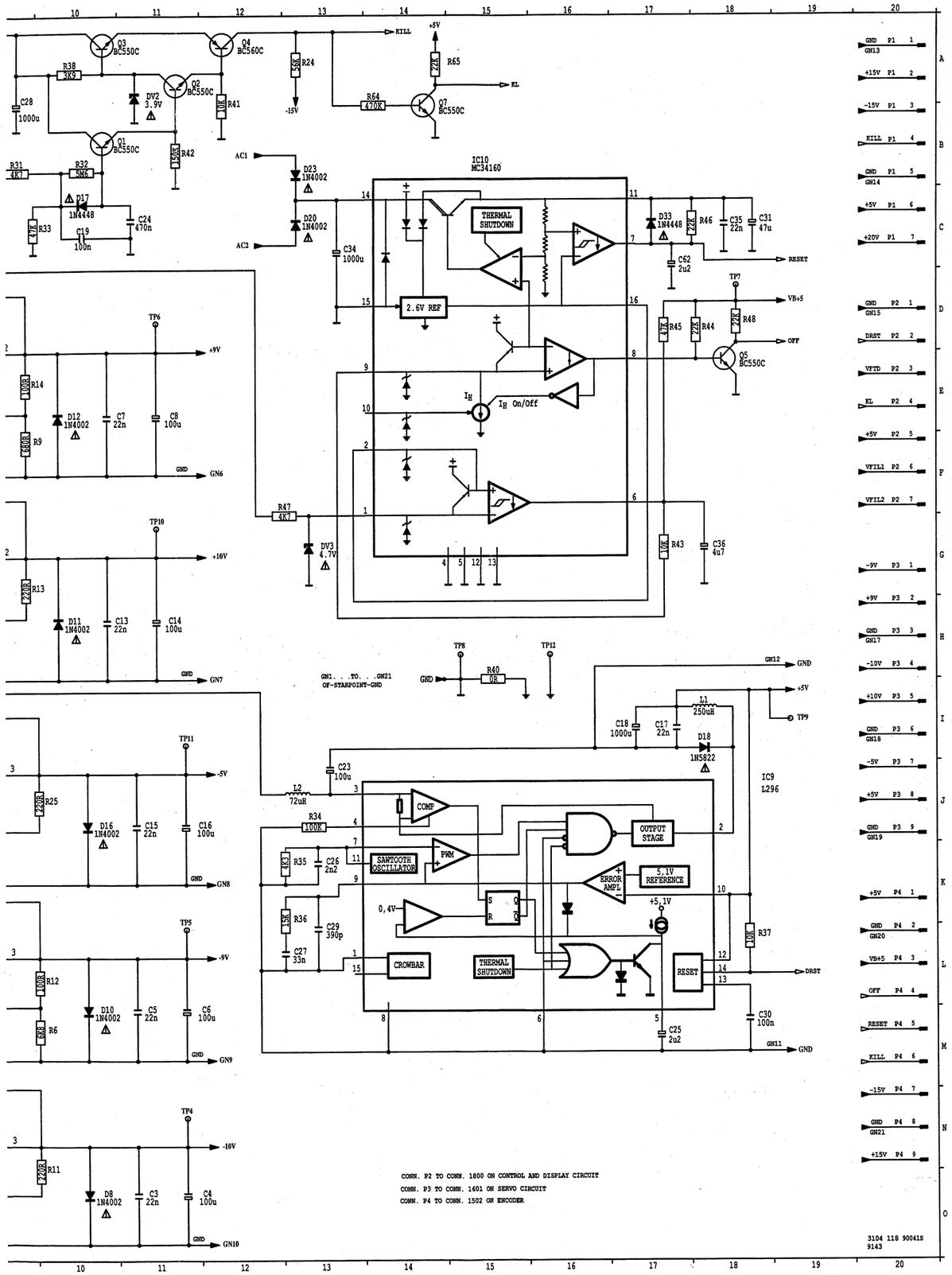

14

SERVO CIRCUIT DIAGRAM

SERVO - 1

LPF

DISC MOTOR CONTROL

MOTOR ON/OFF DETECTION

FOCUS SERVO CONTROL

PRESET CONTROL

DAC

RADIAL POLARITY TRACK JUMP COUNTER

TRAY MOTOR CONTROL

DROP-OUT DETECTION

SR-FF

EMK SAMPLING

CONN. 1520 TO DISC MOTOR

CONN. 1600 TO CONN. 1002 ON WOSP CIRCUIT

CONN. 1601 TO CONN. P3 ON POWER SUPPLY CIRCUIT

CONN. 1603 TO CONN. 1503 ON ENCODER CIRCUIT

CONN. 1602 TO CONN. 1001 ON WOSP CIRCUIT

CONN. 1650 TO TRAYMOTOR

1520	B12	3622	G19
1520	B13	3623	F19
1520	B13	3624	H19
1600	J20	3625	B19
1600	I20	3626	C19
1600	H20	3630	K14
1600	F20	3631	K14
1600	C20	3632	K15
1600	C20	3640	H12
1600	C20	3641	I12
1600	A20	3642	I12
1601	H20	3643	I14
1601	F20	3644	I15
1601	D20	3645	H15
1601	D20	3646	I16
1601	C20	3647	I16
1601	B20	3648	K16
1601	B20	3649	K16
1601	B20	3650	K18
1601	B20	3651	J18
1602	N 7	3652	K19
1602	N 8	3653	J16
1603	B 1	3654	L18
1603	M17	3655	K18
1650	K20	3656	L15
1650	K20	3657	K20
2520	J20	3680	K 2
2520	B 2	3681	J 3
2521	A 2	3682	J 3
2522	B 2	3683	K 3
2523	C 3	3684	K 4
2524	A 3	3685	J 4
2525	B 3	3686	K 4
2526	C 3	3687	J 4
2527	B 6	3688	M 6
2528	F 6	3689	J 5
2540	F 9	3690	J 5
2541	H 1	3691	I 5
2542	D 4	3692	K 5
2543	D 4	3693	K 5
2560	F 8	3694	M 6
2561	E 9	3695	M 5
2562	D 9	3696	J 6
2563	D 9	3697	M 4
2564	E12	3871	J 7
2565	C17	3872	J 7
2566	B17	3873	I 8
2567	C15	3874	J 9
2568	D16	3875	J10
2580	C 9	3877	J 9
2581	B 9	6530	C 7
2582	B11	6531	I 8
2583	B11	6540	D13
2584	D12	6561	F 8
2600	M11	6562	D11
2601	M11	6563	C18
2602	J12	6580	D10
2603	G12	6581	D10
2604	L13	6600	M11
2605	J11	6601	M11
2606	K12	6602	I13
2620	K15	6603	K11
2630	K15	6604	K11
2640	H11	6605	J11
2641	I16	6606	J11
2642	I16	6680	J 3
2645	L16	6681	I 3
2650	K17	6872	K 9
2651	J16	6873	K 9
2652	L16	6874	K 7
2653	L19	7520	B14
2654	L20	7521	D 4
2660	G19	7522	D 5
2661	G18	7540	F 2
2662	H19	7541	E 8
2663	H16	7542	C13
2664	H16	7560	F 5
2665	B18	7560	D 2
2666	C19	7561	G16
2667	C18	7561	E11
2669	D20	7562	E12
2671	E20	7562	F15
2680	I 4	7563	C17
2681	J 4	7580	B10
2682	I 6	7581	B11
2713	J 3	7582	C11
2730	M 3	7600	H13
2870	J 8	7601	M11
2871	I 7	7601	I12
2872	I 9	7602	M14
2873	J 9	7630	K14
2874	J10	7640	H13
3520	B 1	7641	H16
3521	B 2	7642	K16
3522	B 2	7642	K19
3523	C 1	7680	K 3
3524	A 2	7681	J 4
3525	B 3	7682	K 5
3526	C 3	7683	N 6
3527	D 7	7684	I 5
3528	B 6	7685	N 4
3529	D 7	7713	E17
3530	C 7	7730	N 2
3531	C 7	7730	L 4
3532	C 7	7731	M 3
3533	C 5	7731	G17
3534	D 8	7870	I 9
3535	B 8	7870	E15
3542	H 1	7871	I 8
3543	F 4	7871	K10
3545	H 5		
3546	G 6		
3547	C 4		
3550	D12		
3551	C14		
3552	C12		
3560	C 7		
3561	F 8		
3562	F 8		
3563	D 8		
3564	F 7		
3565	E10		
3566	D12		
3567	C11		
3568	C11		
3569	D12		
3570	D12		
3571	D13		
3572	C15		
3573	B16		
3574	C16		
3575	B17		
3576	C17		
3577	B15		
3578	B15		
3580	C 8		
3581	A 9		
3582	C10		
3583	C11		
3584	B11		
3585	D11		
3586	C12		
3600	G12		
3601	G13		
3602	M10		
3603	K10		
3604	M10		
3605	I13		
3606	I11		
3607	I11		
3608	J11		
3609	I11		
3610	I11		
3611	M12		
3612	L13		
3613	M12		
3614	M13		
3615	M13		
3616	L15		
3617	K12		
3620	L17		
3621	E19		

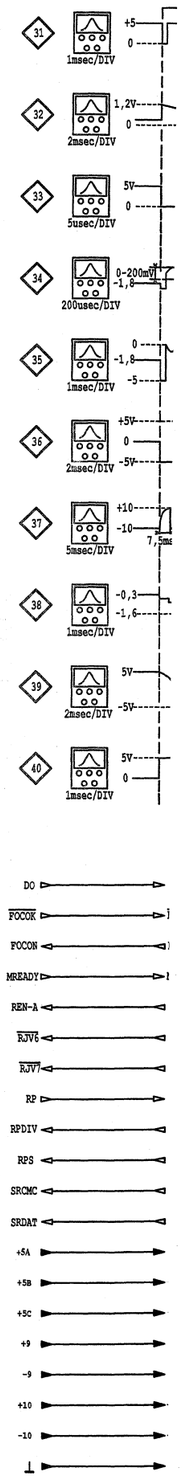

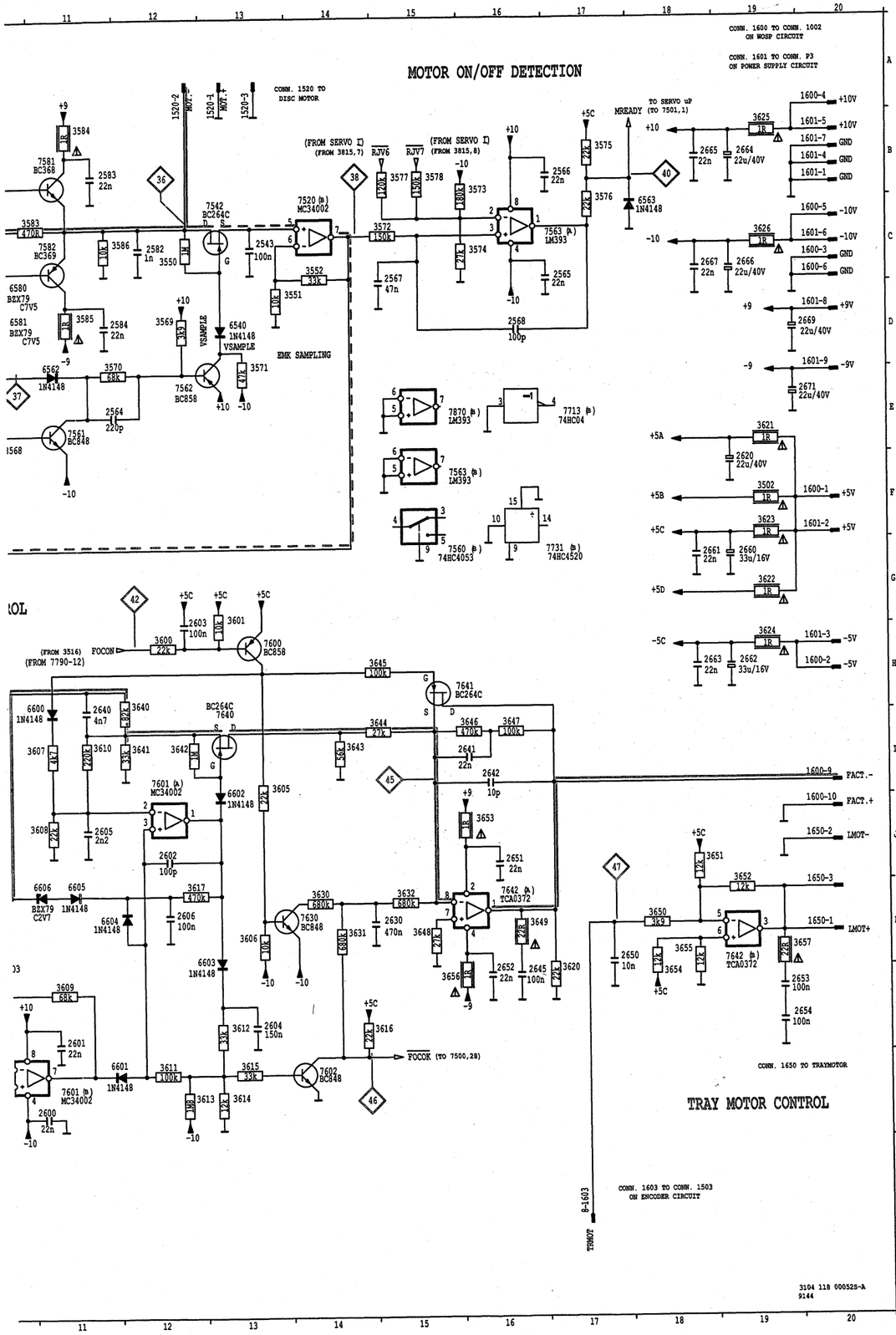

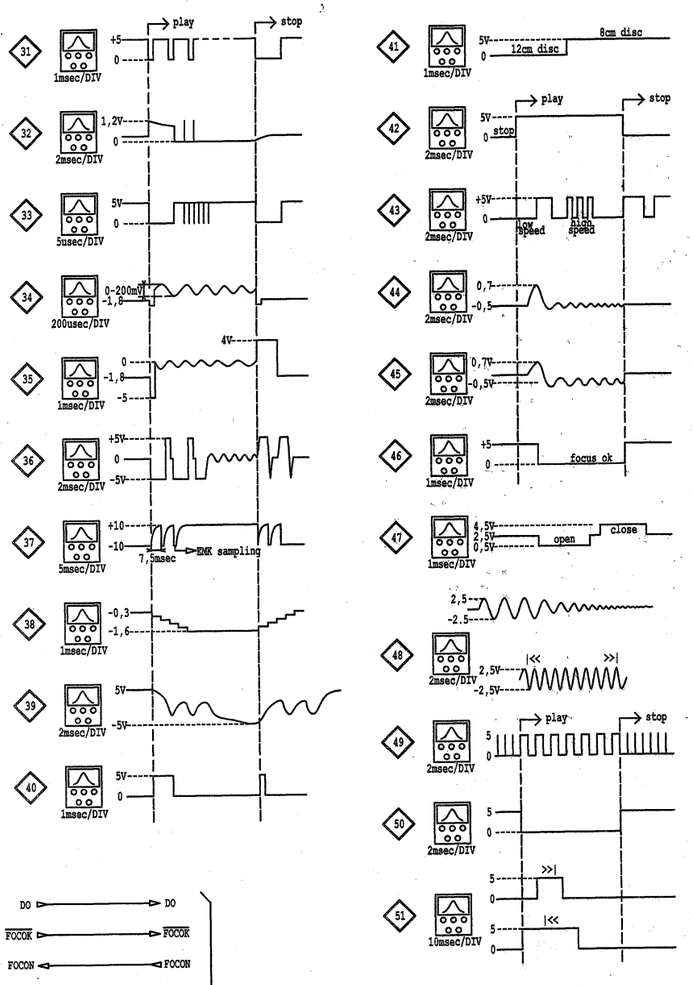

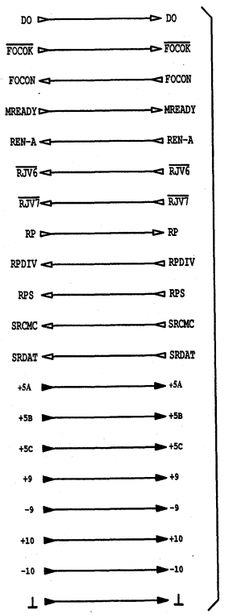

TO/FROM SERVO-2 CIRCUIT

SERVO-1

CAN	- Normalized CA Signal
DO	- Drop Out
FACT+ -	- Focus Actuator
FEN	- Focus Error Normalized
FOCOK	- In Focus Signal
FOCON	- Focus On
GND	- Ground
LMOT+ -	- Tray Motor
MERR	- Motor Control Error Signal
MOT+ -	- Disc Motor
MREADY	- Turntable Motor Ready
REN-A	- Radial Error Normalized A
RJV6-7	- Radial Jump Voltage
RP	- Radial Polarity
RPDIV	- Radial Polarity Divider
RPS	- Radial Polarity Select
SRCMC	- Shift Register Clock Motor Control
SRDAT	- Shift Register Data
TRMOT	- Tray Motor Control

SERVO PANEL COMPONENT SIDE

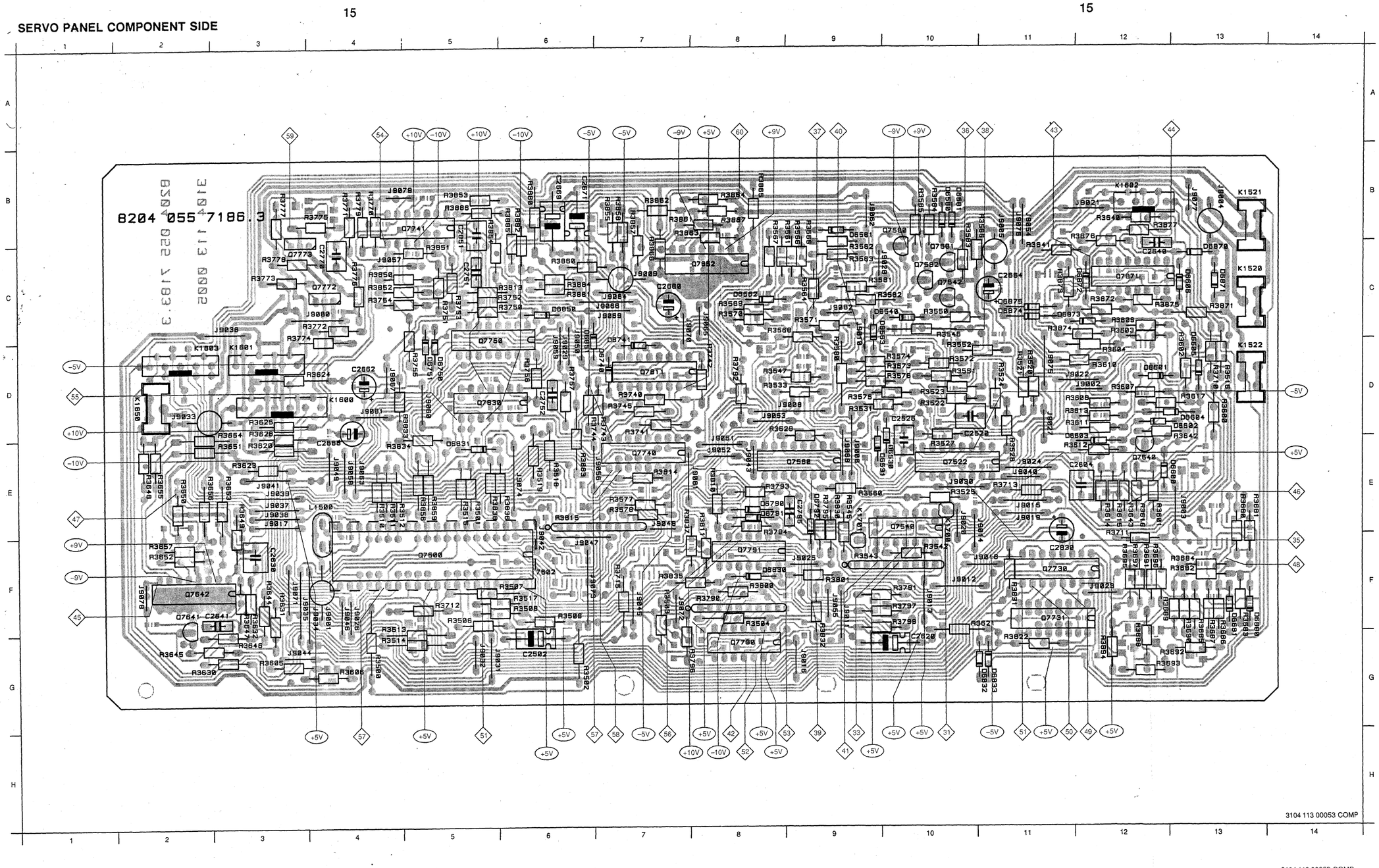

3104 113 00053 COMP

C2502	G6	J
C2520	E10	J
C2526	D10	J
C2604	E12	J
C2620	G10	J
C2630	F3	J
C2640	C12	J
C2641	F3	J
C2660	C7	J
C2662	D4	J
C2664	C11	J
C2666	E4	J
C2669	B6	J
C2671	B6	J
C2751	C5	J
C2752	D6	J
C2770	C4	J
C2795	E9	J
C2830	F11	J
C2851	B5	J
D6530	E10	J
D6531	E9	J
D6540	C10	J
D6561	B9	J
D6562	C8	J
D6563	C9	J
D6580	B10	J
D6581	B10	J
D6600	E13	J
D6601	D12	J
D6602	D13	J
D6603	E12	J
D6604	D13	J
D6605	D13	J
D6606	C13	J
D6680	F13	J
D6681	F13	J
D6740	D7	J
D6741	D7	J
D6750	D5	J
D6751	D5	J
D6790	E8	J
D6791	E8	J
D6792	E9	J
D6830	F8	J
D6831	E5	J
D6832	G11	J
D6833	G11	J
D6850	C6	J
D6851	D6	J
D6870	C13	J
D6871	C13	J
D6872	C12	J
D6873	C11	J
D6874	C11	J
D6875	C11	J
J9001	F4	J
J9002	D12	J
J9003	E13	J
J9004	B13	J
J9005	B11	J
J9006	E9	J
J9009	C7	J
J9010	C9	J
J9011	F9	J
J9012	F10	J
J9013	F10	
J9014	F11	
J9015	E11	
J9016	G9	

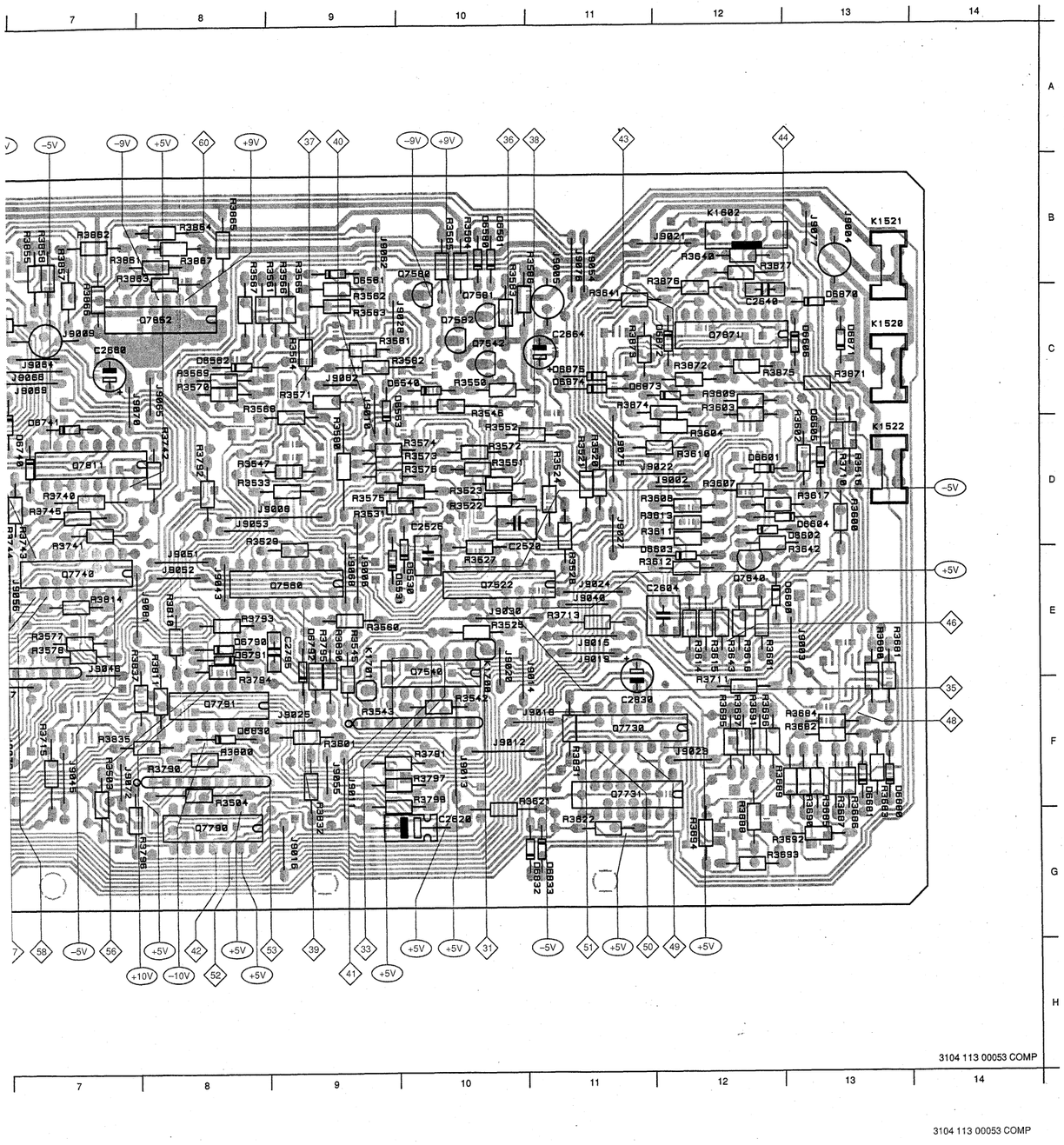

3104 113 00053 COMP

C2502	G6	J9017	E3	K1520	C13	R3551	D10	R3650	E2	R3800	F8
C2520	E10	J9018	F11	K1521	B13	R3560	E9	R3651	E3	R3801	F9
C2526	D10	J9019	E11	K1522	D13	R3562	C9	R3652	F2	R3810	E8
C2604	E12	J9020	E10	K1600	D4	R3563	C9	R3653	E3	R3811	E8
C2620	G10	J9021	B12	K1601	D3	R3564	C9	R3654	D3	R3813	C6
C2630	F3	J9022	D11	K1602	B12	R3565	B9	R3655	E2	R3814	E7
C2640	C12	J9023	F12	K1603	D2	R3566	B9	R3657	F2	R3815	E6
C2641	F3	J9024	E11	K1650	D2	R3567	B8	R3658	E2	R3830	E9
C2660	C7	J9025	F9	K1700	E10	R3568	C8	R3669	F12	R3831	F11
C2662	D4	J9026	F4	K1701	E9	R3569	C8	R3681	E13	R3832	G9
C2664	C11	J9027	D11	L1500	E4	R3570	C8	R3682	F13	R3833	D5
C2666	E4	J9028	C10	Q7500	F5	R3571	C9	R3683	F13	R3834	E5
C2669	B6	J9029	D6	Q7522	E10	R3572	D10	R3684	F13	R3835	F7
C2671	B6	J9030	E10	Q7540	E10	R3573	D10	R3685	G13	R3836	E6
C2751	C5	J9031	G5	Q7542	C10	R3574	D10	R3686	G13	R3837	E7
C2752	D6	J9032	G5	Q7560	E9	R3575	D9	R3687	G13	R3838	E5
C2770	C4	J9033	D2	Q7580	B10	R3576	D10	R3688	G12	R3851	C5
C2795	E9	J9034	F4	Q7581	C10	R3577	E7	R3690	G13	R3852	C4
C2830	F11	J9035	F3	Q7582	C10	R3578	E7	R3691	F12	R3853	B5
C2851	B5	J9036	C3	Q7640	E12	R3580	D9	R3692	G13	R3854	B5
D6530	E10	J9037	E3	Q7641	F2	R3581	C9	R3693	G12	R3855	B7
D6531	E9	J9038	E3	Q7642	F2	R3581	B9	R3694	G12	R3856	E5
D6540	C10	J9039	E3	Q7730	F11	R3582	C10	R3695	F12	R3857	B7
D6561	B9	J9040	E11	Q7731	F11	R3583	C10	R3696	F12	R3858	B7
D6562	C8	J9041	E3	Q7740	E7	R3584	B10	R3697	F12	R3859	E5
D6563	C9	J9042	F6	Q7741	B5	R3585	B10	R3710	D13	R3860	C6
D6580	B10	J9043	E8	Q7750	D5	R3586	B11	R3711	F12	R3861	B7
D6581	B10	J9044	G3	Q7772	C4	R3600	E13	R3712	F5	R3862	B7
D6600	E13	J9045	F7	Q7773	C3	R3600	D13	R3713	E11	R3863	B8
D6601	D12	J9046	F4	Q7790	G8	R3600	D12	R3715	F7	R3864	B8
D6602	D13	J9047	F6	Q7791	F8	R3601	E12	R3740	D7	R3865	B8
D6603	E12	J9048	E7	Q7811	D7	R3602	D13	R3741	D7	R3866	C7
D6604	D13	J9049	E4	Q7830	D5	R3603	C12	R3742	D8	R3867	B8
D6605	D13	J9050	D6	Q7852	C8	R3604	D12	R3743	D7	R3871	C13
D6606	C13	J9051	E8	Q7871	C12	R3605	G3	R3744	D6	R3872	C12
D6680	F13	J9052	E8	R2552	D10	R3606	G4	R3745	D7	R3873	C11
D6681	F13	J9053	D8	R3050	C4	R3607	D12	R3750	C6	R3874	C11
D6740	D7	J9054	B11	R3500	G4	R3609	C12	R3751	C5	R3875	C12
D6741	D7	J9055	F9	R3501	E5	R3610	D12	R3752	C6	R3876	B12
D6750	D5	J9056	E7	R3502	G6	R3611	D12	R3753	C5	R3877	B12
D6751	D5	J9057	C4	R3503	F7	R3612	E12	R3754	C4	R3880	B6
D6790	E8	J9058	E4	R3504	F8	R3613	D12	R3755	D5	R3881	C6
D6791	E8	J9059	D6	R3506	F5	R3614	E12	R3756	D6	R3882	B6
D6792	E9	J9060	D5	R3507	F6	R3615	E12	R3757	D6	R3883	E6
D6830	F8	J9061	D4	R3508	F6	R3616	E12	R3770	B4	R3884	C6
D6831	E5	J9062	B9	R3509	F6	R3617	D13	R3771	B4	R3885	B6
D6832	G11	J9063	E4	R3510	E4	R3620	E3	R3772	C4	R3886	B5
D6833	G11	J9064	C7	R3511	E4	R3621	G10	R3773	C3		
D6850	C6	J9065	C8	R3512	E4	R3622	G11	R3774	C3		
D6851	D6	J9066	C7	R3513	G4	R3623	E3	R3775	B4		
D6870	C13	J9067	D4	R3514	G4	R3624	D4	R3776	C4		
D6871	C13	J9068	E9	R3515	E5	R3625	D3	R3777	B3		
D6872	C12	J9069	C7	R3516	D13	R3626	D3	R3778	C3		
D6873	C11	J9070	C7	R3517	F6	R3630	G2	R3779	B4		
D6874	C11	J9070	B4	R3518	E6	R3631	F3	R3790	F8		
D6875	C11	J9071	F3	R3519	E6	R3632	F3	R3791	F10		
J9001	F4	J9072	F7	R3520	D11	R3640	B12	R3792	D8		
J9002	D12	J9073	F6	R3521	D11	R3641	C11	R3793	E8		
J9003	E13	J9074	E6	R3522	D10	R3642	E13	R3794	F8		
J9004	B13	J9075	D11	R3523	D10	R3643	E12	R3795	E9		
J9005	B11	J9076	B11	R3524	D11	R3644	F3	R3796	G8		
J9006	E9	J9077	B13	R3525	E10	R3645	G2	R3797	F10		
J9009	C7	J9078	F2	R3527	E10	R3646	G3	R3799	F10		
J9010	C9	J9080	C4	R3528	E11	R3647	F3				
J9011	F9	J9081	E8	R3529	D8	R3648	E2				
J9012	F10	J9082	C9	R3531	D9	R3649	E3				
J9013	F10			R3533	D8						
J9014	F11			R3542	F10						
J9015	E11			R3543	F9						
J9016	G9			R3545	E9						
				R3546	C10						
				R3547	D8						
				R3550	C10						

SERVO PANEL SOLDER SIDE

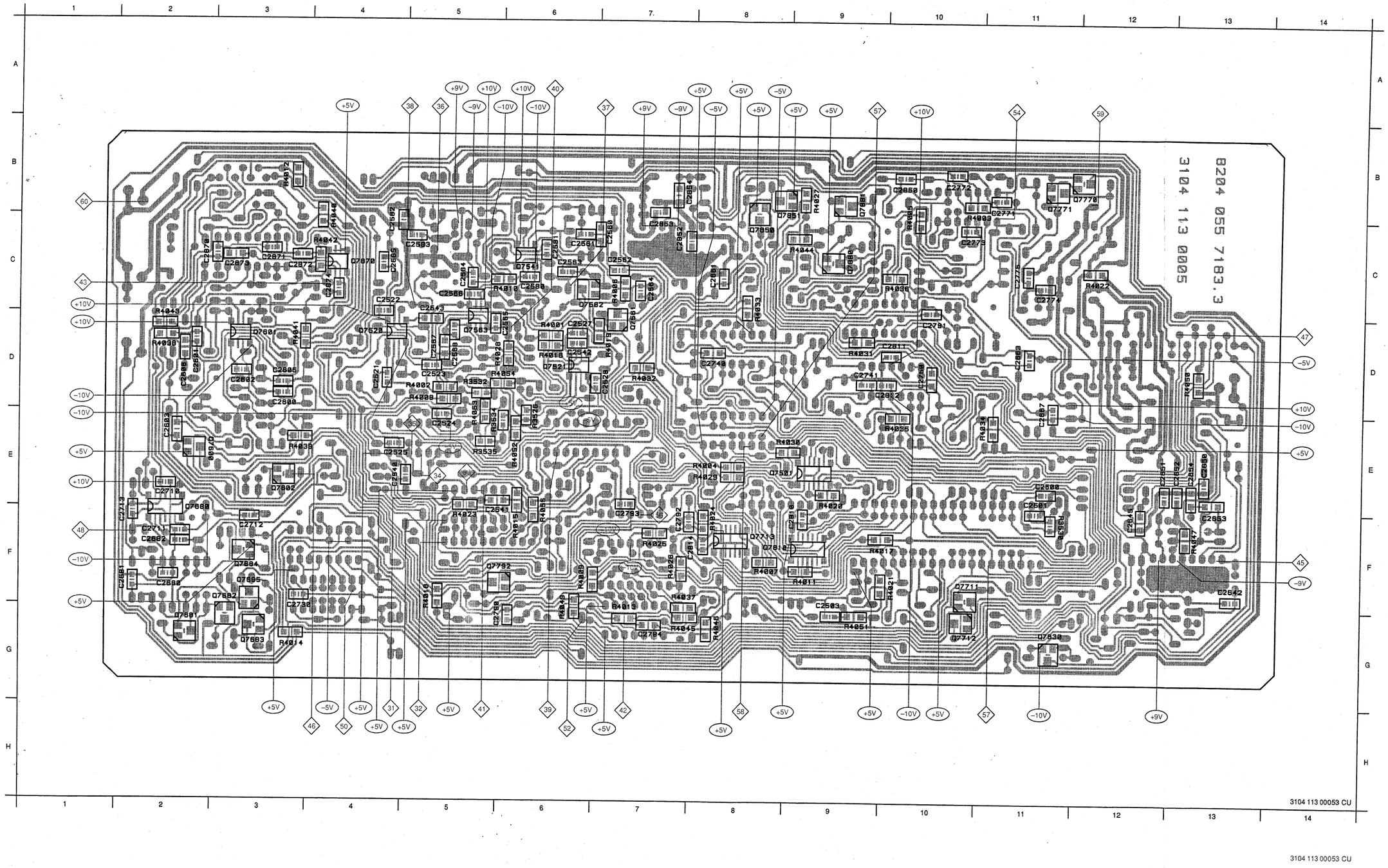

16

C2500	E11
C2501	E11
C2503	G9
C2521	D4
C2522	C4
C2523	D5
C2524	E5
C2525	E4
C2527	D6
C2528	D7
C2540	E4
C2541	F5
C2542	D6
C2543	C5
C2560	C7
C2561	C6
C2562	C7
C2563	C6
C2564	C7
C2565	D6
C2566	C5
C2567	D5
C2568	D5
C2581	C6
C2582	C4
C2583	C5
C2584	C5
C2600	D3
C2601	D2
C2602	D3
C2603	E2
C2605	D3
C2606	D2
C2642	F13
C2645	F12
C2650	E13
C2651	E12
C2652	E13
C2653	F13
C2654	E13
C2661	C8
C2663	D11
C2665	C4
C2667	E11
C2680	F2
C2681	F2
C2682	F2
C2710	E2
C2711	F2
C2712	F3
C2713	F2
C2730	G3
C2740	D8
C2741	D9
C2750	D10
C2771	B11
C2772	B10
C2773	C10
C2774	C11
C2775	C11
C2790	G6
C2791	D10
C2793	F7
C2794	G7
C2810	F9
C2811	D10
C2812	D10
C2814	F8

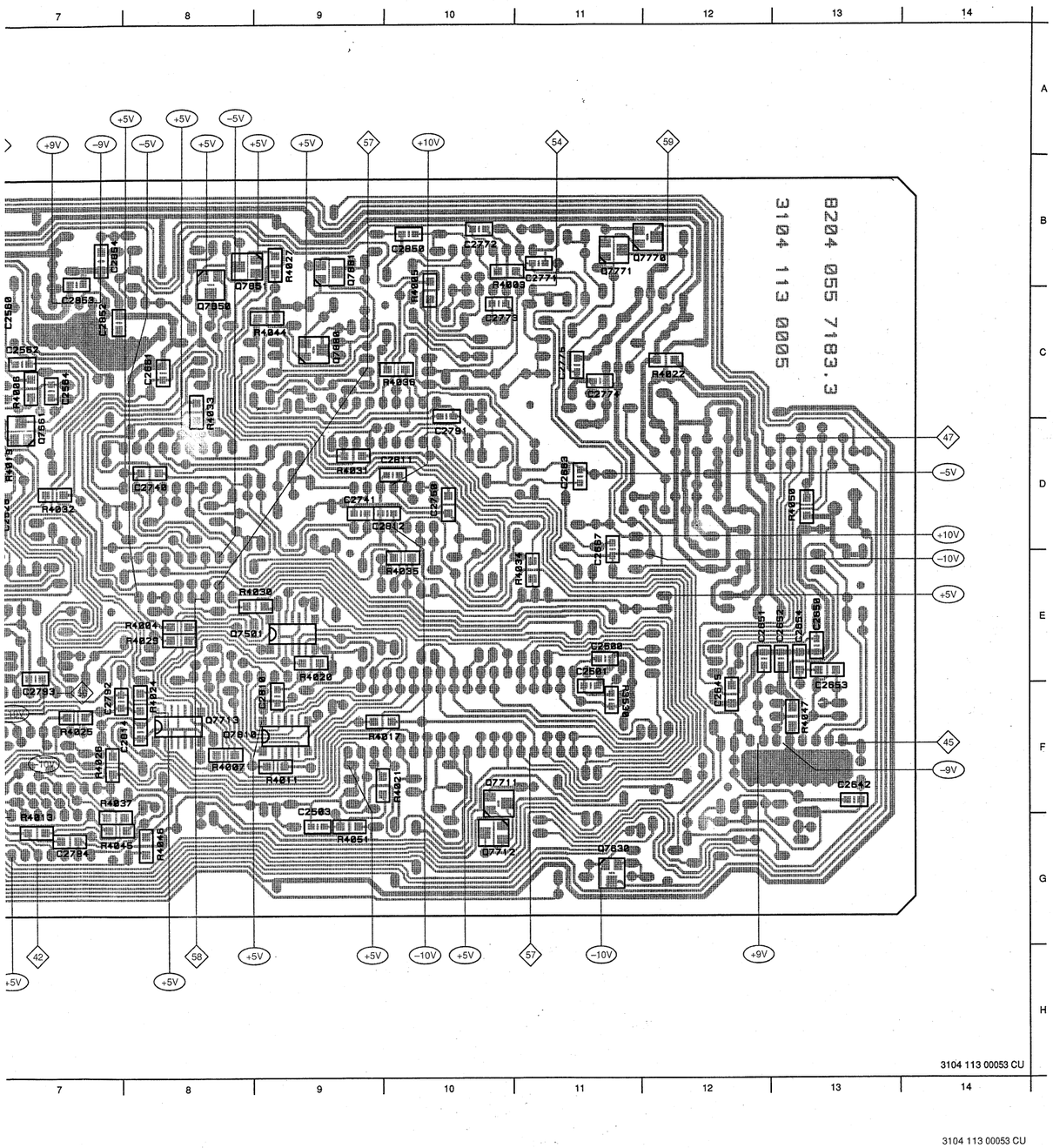

16

C2500	E11	C2850	B10	R4027	B9
C2501	E11	C2852	C7	R4028	D6
C2503	G9	C2853	C7	R4029	E8
C2521	D4	C2854	B7	R4030	E9
C2522	C4	C2870	C3	R4031	D9
C2523	D5	C2871	C3	R4032	D7
C2524	E5	C2872	C3	R4033	C8
C2525	E4	C2873	C3	R4034	E11
C2527	D6	C2874	C4	R4035	E10
C2528	D7	C7292	F7	R4036	C10
C2540	E4	Q7501	E9	R4037	F7
C2541	F5	Q7520	D4	R4038	D2
C2542	D6	Q7521	D6	R4039	E3
C2543	C5	Q7541	C6	R4040	C4
C2560	C7	Q7561	D7	R4041	D3
C2561	C6	Q7562	C6	R4042	C4
C2562	C7	Q7563	D5	R4043	D2
C2563	C6	Q7600	E2	R4044	C9
C2564	C7	Q7601	G2	R4045	G7
C2565	D6	Q7601	D3	R4046	G8
C2566	C5	Q7602	E3	R4047	F13
C2567	D5	Q7630	G11	R4049	G6
C2568	D5	Q7680	F2	R4050	D13
C2581	C6	Q7682	F3	R4051	G9
C2582	C4	Q7683	G3	R4052	E6
C2583	C5	Q7684	F3	R4053	E5
C2584	C5	Q7685	F3	R4054	D6
C2600	D3	Q7711	F10	R4055	F6
C2601	D2	Q7712	G10		
C2602	D3	Q7713	F8		
C2603	E2	Q7770	B12		
C2605	D3	Q7771	B11		
C2606	D2	Q7792	F6		
C2642	F13	Q7810	F8		
C2645	F12	Q7850	C8		
C2650	E13	Q7851	B8		
C2651	E12	Q7870	C4		
C2652	E13	Q7880	C9		
C2653	F13	Q7881	B9		
C2654	E13	R3526	E6		
C2661	C8	R3530	F11		
C2663	D11	R3532	D5		
C2665	C4	R3534	E5		
C2667	E11	R3535	E5		
C2680	F2	R4001	D6		
C2681	F2	R4002	D5		
C2682	F2	R4003	B10		
C2710	E2	R4004	E8		
C2711	F2	R4005	C10		
C2712	F3	R4006	C7		
C2713	F2	R4007	F8		
C2730	G3	R4008	D5		
C2740	D8	R4009	F6		
C2741	D9	R4010	C6		
C2750	D10	R4011	F9		
C2771	B11	R4012	B3		
C2772	B10	R4013	G7		
C2773	C10	R4014	G3		
C2774	C11	R4015	F6		
C2775	C11	R4016	D6		
C2790	G6	R4017	F9		
C2791	D10	R4018	F5		
C2793	F7	R4019	D7		
C2794	G7	R4020	E9		
C2810	F9	R4021	F10		
C2811	D10	R4022	C12		
C2812	D10	R4023	F5		
C2814	F8	R4024	F8		
		R4025	F7		
		R4026	F7		

17

SERVO - 2

CONN. 1603 TO CONN. 1503 ON ENCODER CIRCUIT

CONN. 1602 TO CONN. 1001 ON WOSP CIRCUIT

CONN. 1600 TO CONN. 1002 ON WOSP CIRCUIT

CONN. 1522 TO

CONN. 1521 TO SLIDE MOTOR

RADIAL SERVO CONTROL

RADIAL LOOP SWITCH

RADIAL GAIN ADJUST

REN

RADIAL uP JUMP CONTROL

7500 PCB80C51

PORT 0

PORT 1

PORT 2

PORT 3

RAM

ROM

CPU

TIMING AND CONTROL

INSTRUCTION REGISTER

OSCILLATOR

74HC164

TL084

MC34084

TCA0372

3104 118 00052R-B
9144

3104 118 00052S-B
9144

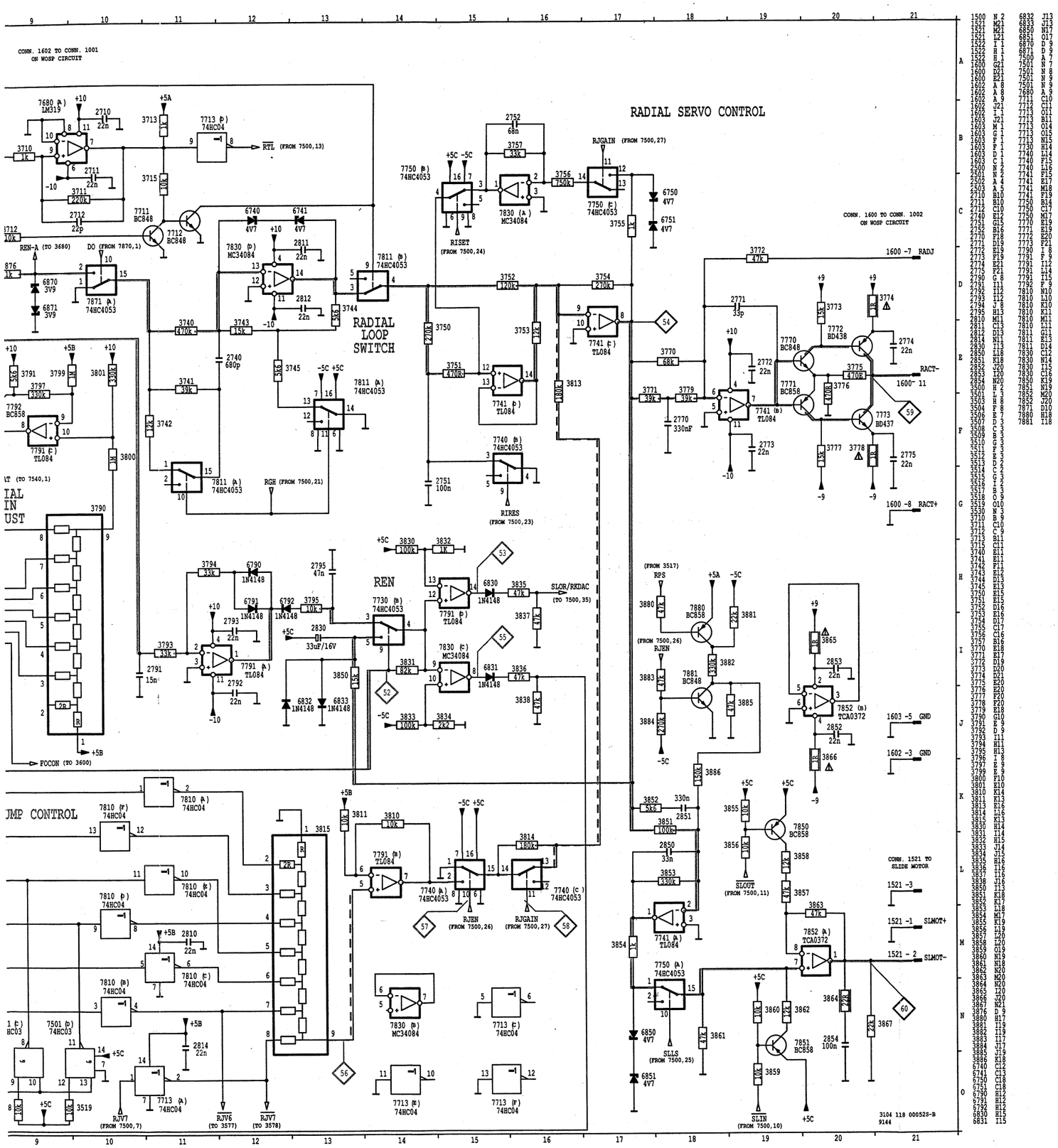

SERVO-2

AM	- Additional Mute
CRI	- Counter Reset Inhibit
FOCOK	- In Focus Signal
FOCON	- Focus On
GND	- Ground
LSRON	- Laser On
MREADY	- Turntable Motor Ready
RACT+ -	- Radial Actuator
RADJ	- Radial Gain Adjust
RBI	- Radial Brake Inhibit
REGAIN	- Radial Gain Current
REN	- Radial Error Normalized
REN-A	- Radial Error Normalized A
RGH	- Radial Gain High
RIRES	- Radial Integrator Reset
RISET	- Radial Integrator Preset
RJEN	- Radial Jump Enable
RJGAIN	- Radial Jump Gain
RJV1-7	- Radial Jump Voltage
RLS	- Radial Loop Switch
RP	- Radial Polarity
RPDIV	- Radial Polarity Divider
RTL	- Radial Track Loss
SACK	- Servo Acknowledge
SDAT	- Servo Data
SLBS	- Slide Begin Switch
SLIN	- Slide Inwards Pulse
SLLS	- Slide Servo Loopswitch
SLMOT+ -	- Slide Motor
SLOR/RKDAC	- Slide Outwards Request/ADC Determination Radial Amplitude
SLOUT	- Slide Outwards Pulse
SRCRG	- Shift Register Clock Radial Gain
SRDAT	- Shift Register Data
SREQ	- Servo Request
SRST	- Servo Reset
TLN	- Trackloss Normalized

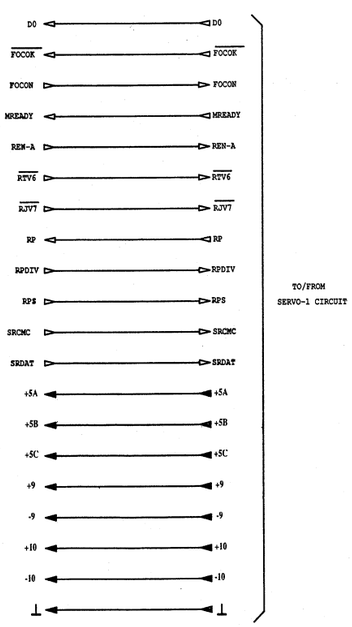

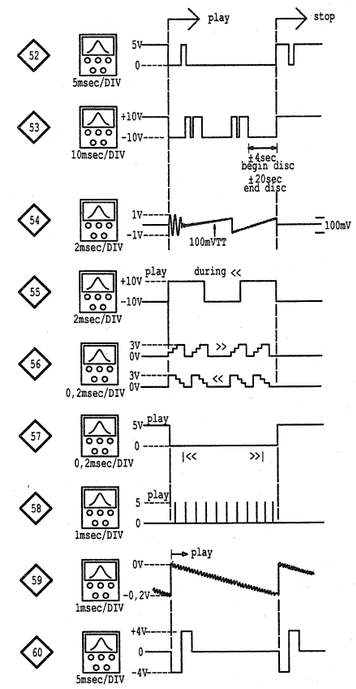

WOSP CIRCUIT DIAGRAM

WOSP - 1

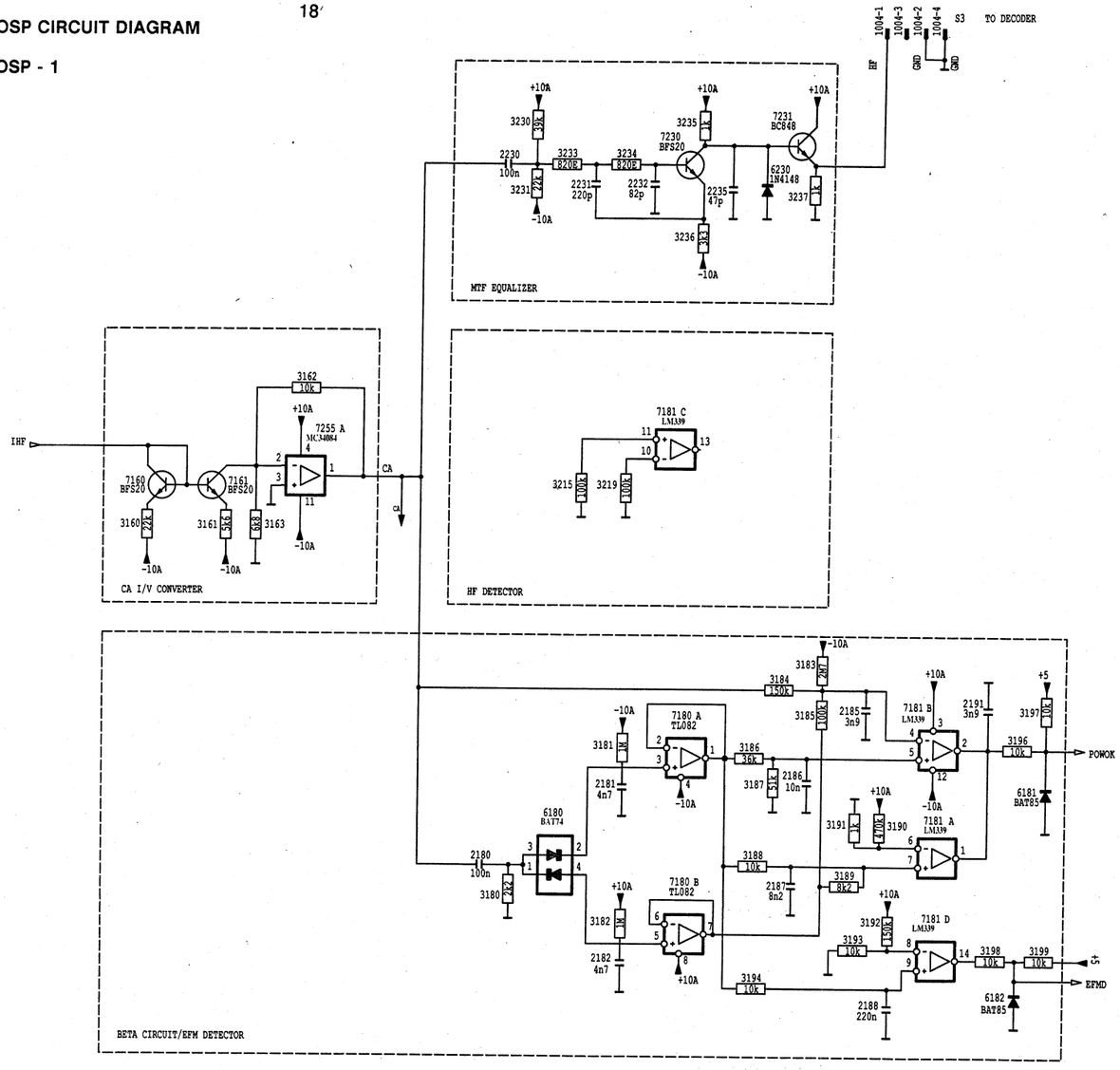

18

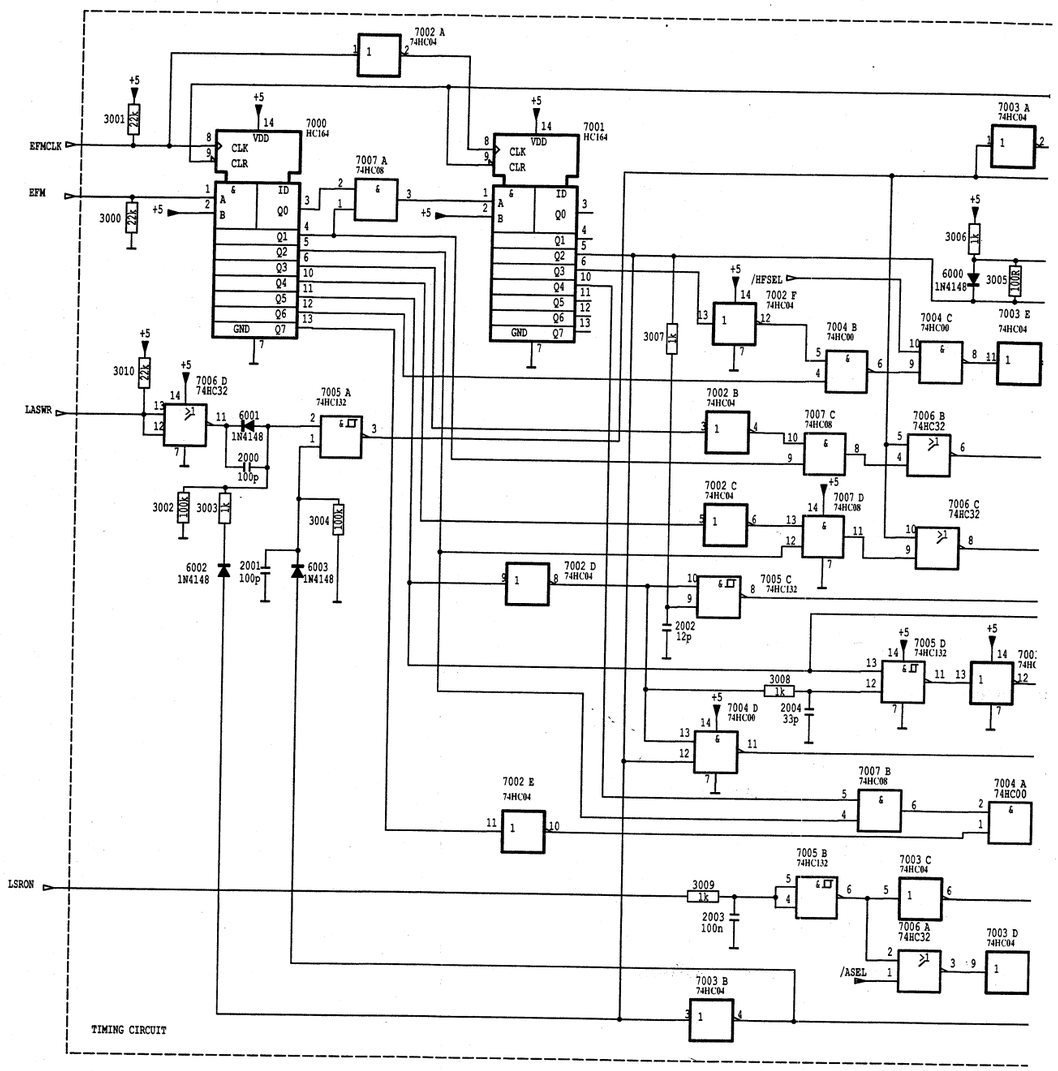

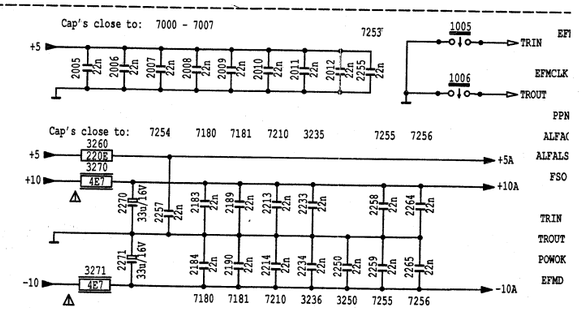

3104 118
9145

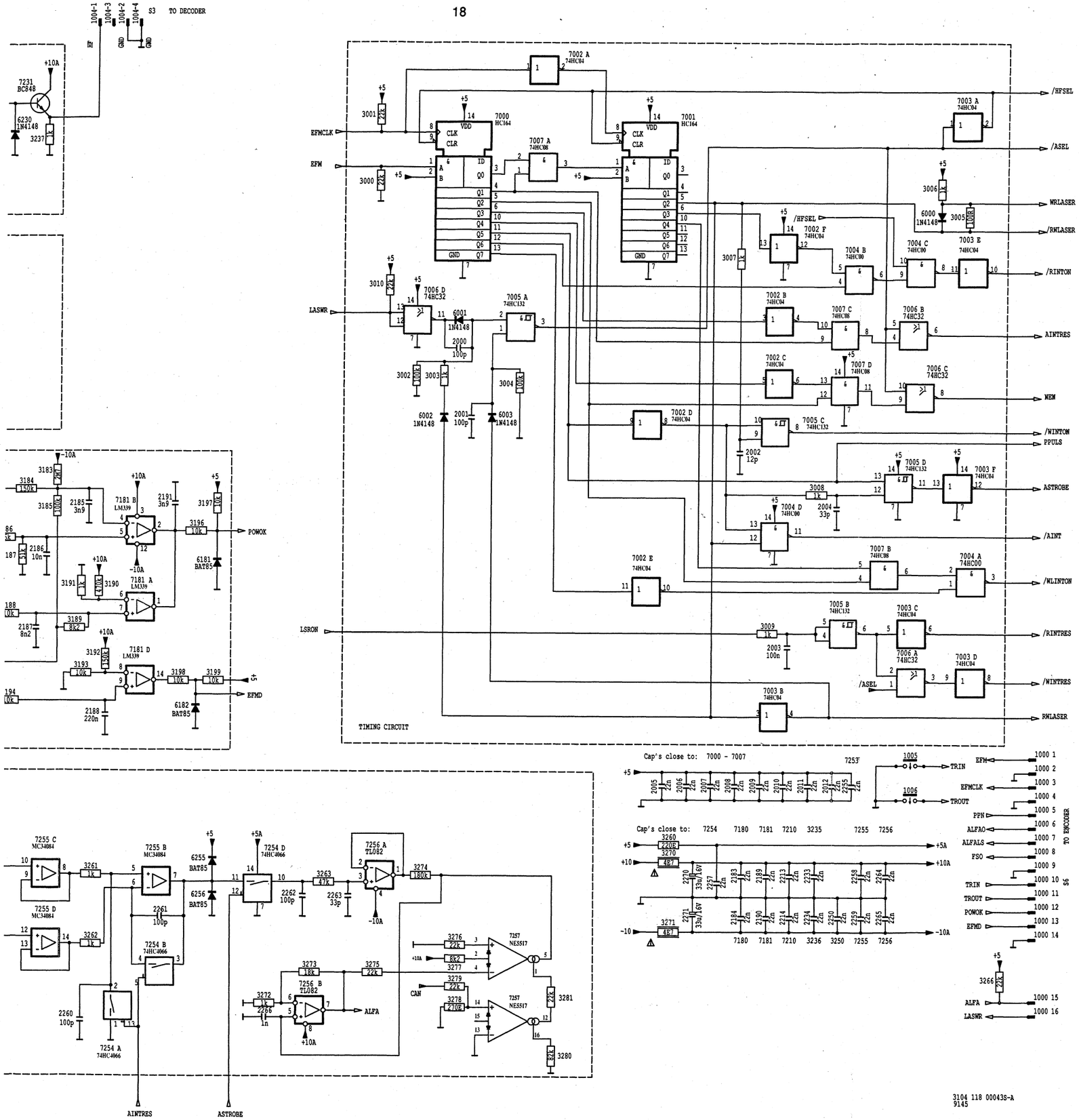

WOSP-1

AINT	- Absorption Integrator
AINTRES	- Absorption Integrator Reset
ALFA	- Actual Absorption
ALFA0	- Absorption Set
ALFALS	- Absorption Loop Switch
ASEL	- CA Current Select
ASTROBE	- Absorption Strobe
CA	- Central apperture signal
EFM	- Eight to Fourteen Modulation
EFMCLK	- EFM Clock
EFMD	- Eight to Fourteen Modulation Detect
FSO	- Forward Sense Diode Reference Current
GND	- Ground
HF	- High Frequency
HFSEL	- Select CA Current For HF Reading Purposes
IA	- 3 Spot Push Pull Diode Current
LASWR	- Laser Write/Non Read
LSRON	- Laser On
NEN	- Normalizer Enable
POWOK	- Writing Power Ok
PPN	- Normalized Push Pull Signal
RINTON	- Read Integrator On
RINTRES	- Read Integrator Reset
RWLASER	- Read/Nonwrite laserpower
TRIN	- Tray In Switch
TROUT	- Tray Out Switch
WINTON	- Write Integrator On
WLINTON	- Write Integrator On
WRLASER	- Write Mode/Non Read Mode Laser

19

WOSP PANEL COMPONENT SIDE

1000 E11	2011 F7	2101 B5	2120 B5	2232 B2	2270 A9	3021 E10	3041 D9	3060 C8	3113 C6	3132 A4	3188 E2	3237 B2	3272 D3	6024 D8	6104 D5	7005 E7	7038 C8	7142 B5
1001 A2	2012 E9	2102 B7	2121 B5	2233 A3	2271 A9	3022 E7	3042 D9	3061 C7	3114 D4	3133 A3	3189 E2	3250 C5	3273 D2	6025 D9	6105 B5	7006 F6	7039 D8	7160 B4
1002 A10	2020 D6	2103 C6	2122 C6	2234 B2	2272 B9	3023 E6	3043 D9	3062 C7	3115 C2	3140 C5	3191 E2	3251 C4	3274 D2	6026 D9	6106 D5	7007 E8	7040 C9	7161 B4
1003 B6	2021 B9	2104 C6	2180 F2	2250 C5	2273 B9	3024 E7	3044 D9	3063 C8	3116 B3	3141 C5	3192 D2	3252 D5	3275 E2	6027 C9	6107 C5	7020 E6	7041 D8	7180 F2
1004 B1	2022 B8	2105 B7	2181 F2	2251 C4	2274 B9	3025 D6	3045 C9	3064 B10	3117 B5	3142 C5	3193 D2	3253 D5	3276 D3	6028 C9	6108 C6	7021 D6	7042 C8	7181 E2
1005 F3	2023 D9	2106 B5	2182 E2	2252 C4	2275 B9	3026 E6	3046 B9	3065 B8	3118 B5	3143 C5	3194 D2	3254 C4	3277 E2	6029 B8	6109 C5	7022 D7	7043 C8	7230 B2
1006 F4	2024 D8	2107 B6	2183 F2	2253 C4	3000 D10	3028 D6	3047 C9	3100 E4	3119 C7	3144 C5	3195 D2	3255 C4	3278 D3	6030 D7	6180 E2	7024 D6	7044 D8	7231 A2
1007 A4	2025 B7	2108 D4	2184 F3	2254 C4	3001 E10	3029 C10	3048 C10	3101 E5	3120 C6	3160 B3	3196 F3	3256 D4	3279 D3	6031 D7	6181 E10	7026 D8	7045 D8	7250 C4
2000 F6	2026 C7	2109 C7	2185 F2	2255 C4	3002 F5	3030 C10	3049 B10	3102 E4	3121 C7	3161 C4	3197 F4	3257 D4	3280 D3	6032 C8	6182 D10	7027 D9	7046 D8	7251 C4
2001 E7	2027 D8	2110 D7	2186 F2	2257 D4	3003 E5	3031 B10	3050 C10	3103 B5	3122 B3	3162 B3	3198 F3	3258 C4	3281 E3	6033 C9	6230 A2	7028 D9	7047 C10	7252 D4
2002 F7	2028 D7	2111 C6	2187 E1	2258 C3	3004 F6	3032 D9	3051 C7	3104 D5	3123 B3	3163 C3	3199 F4	3259 C4	3779 B10	6034 E4	6250 C4	7029 D9	7100 E5	7253 C4
2003 F5	2029 D7	2112 C7	2188 D1	2259 C3	3005 F9	3033 D8	3052 C9	3105 C5	3124 C2	3180 E2	3215 C2	3260 D4	6000 F9	6035 E5	6251 C4	7030 D9	7101 E4	7254 D5
2004 E8	2030 C10	2113 B3	2189 F2	2260 C3	3006 F9	3034 D8	3053 C7	3106 C6	3125 B4	3181 F3	3219 C2	3261 C3	6001 E5	6036 D5	6255 C3	7031 D9	7102 C6	7255 C3
2005 E9	2031 B10	2114 B3	2190 E1	2261 C3	3007 F8	3035 D8	3054 B7	3107 C6	3126 B4	3182 E2	3230 A3	3262 C3	6002 E5	6037 B9	6256 D3	7032 C9	7105 B6	7256 D2
2006 F9	2032 B7	2115 B4	2191 F2	2262 D2	3008 E8	3036 D8	3055 D7	3108 B7	3127 B4	3183 F2	3231 B3	3263 D3	6005 F5	6038 B10	7000 E9	7033 C9	7104 C5	7257 E3
2007 F8	2033 C10	2116 B3	2215 C2	2263 D2	3009 F5	3037 D8	3056 B8	3109 C6	3128 A4	3184 E2	3233 B2	3264 D5	6020 D7	6100 E5	7001 F9	7034 C9	7105 C6	
2008 E6	2034 C10	2117 B3	2214 C1	2264 D3	3010 E10	3038 D8	3057 C8	3110 C6	3129 B4	3185 E2	3234 B2	3266 E10	6021 D6	6101 D5	7002 F7	7035 D7	7106 B3	
2009 E9	2035 D10	2118 B4	2250 B3	2265 E2	3019 D10	3039 D9	3058 C8	3111 B7	3130 B3	3186 F2	3235 A2	3270 B8	6022 E5	6102 D5	7003 E6	7036 B7	7107 B4	
2010 E7	2100 E5	2119 B3	2231 B2	2266 D3	3020 D5	3040 D9	3059 C8	3112 C6	3131 A3	3187 F2	3236 B2	3271 A8	6023 E5	6103 D4	7004 E8	7037 C7	7140 B5	

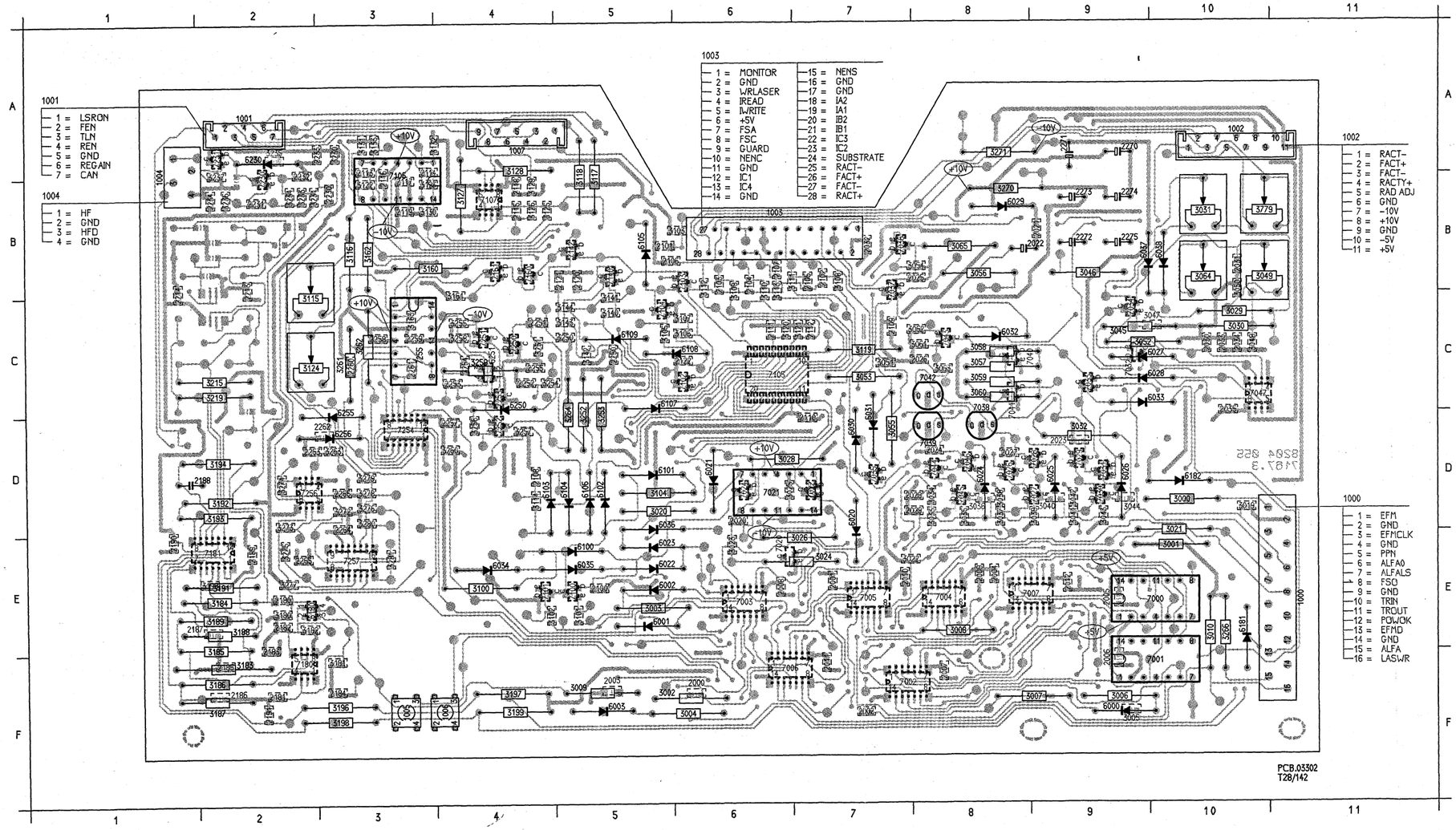

20

WOSP PANEL SOLDER SIDE

1000 E11
1001 A2
1002 A10
1003 B6
1004 B1
1005 F3
1006 F4
1007 A4
2000 F6
2001 E7
2002 F7
2003 F5
2004 E8
2005 E9
2006 F9
2007 F8
2008 E6
2009 E8
2010 E7
2011 F7
2012 E9
2020 D6
2021 B9
2022 B8
2023 D8
2024 D8
2025 B7
2026 C7
2027 D8
2028 D7
2029 D7
2030 C10
2031 B10
2032 B7
2033 C10
2034 C10
2035 D10
2100 E5
2101 B5
2102 B7
2103 C6
2104 C6
2105 B7
2106 B5
2107 B6
2108 D4
2109 C7
2110 D7
2111 C6
2112 C7
2113 B5
2114 B5
2115 B4
2116 B3
2117 B3
2118 B4
2119 B3
2120 B5
2121 B5
2122 C6
2180 E2
2181 F2
2182 E2
2183 F2
2184 F3
2185 F2
2186 F2
2187 E1
2188 D1
2189 E2
2190 E1
2191 F2
2213 C2
2214 C1
2230 B3
2231 B2
2232 B2
2233 A3
2234 B2
2250 C5
2251 C4
2252 C4
2253 C4
2254 C4
2255 C4
2256 C4
2257 D4
2258 C3
2259 C3
2260 C3
2261 C3
2262 D2
2263 D2
2264 D5
2265 E2
2266 D3
2270 A9
2271 A9
2272 B9
2273 B9
2274 B9
2275 B9
3000 D10
3001 E10
3002 F5
3003 E5
3004 F6
3005 F9
3006 F9
3007 F8
3008 E8
3009 F5
3010 E10
3019 D10
3020 D5
3021 E10
3022 E7
3023 E6
3024 E7
3025 D6
3026 E6
3028 D6
3029 C10
3030 C10
3031 B10
3032 D9
3033 D8
3034 D8
3035 D8
3036 D8
3037 D8
3038 D8
3039 D9
3040 D9
3041 D9
3042 D9
3043 D9
3044 D9
3045 C9
3046 B9
3047 C9
3048 C10
3049 B10
3050 C10
3051 C7
3052 C9
3053 C7
3054 B7
3055 D7
3056 B8
3057 C8
3058 C8
3059 C8
3060 C8
3061 C7
3062 C7
3063 C8
3064 B10
3065 B8
3100 E4
3101 E5
3102 E4
3103 B5
3104 D5
3105 C5
3106 C6
3107 C6
3108 B7
3109 C6
3110 C6
3111 B7
3112 C6
3113 C6
3114 D4
3115 C2
3116 B3
3117 B5
3118 B5
3119 C7
3120 C6
3121 C7
3122 B3
3123 B5
3124 C2
3125 B4
3126 B4
3127 B4
3128 A4
3129 B4
3130 B3
3131 A3
3132 A4
3133 A3
3140 C5
3141 C5
3142 C5
3143 C5
3144 C5
3160 B3
3161 C4
3162 B3
3163 C3
3180 E2
3181 F3
3182 E2
3183 F2
3184 E2
3185 E2
3186 F2
3187 F2
3188 E2
3189 E2
3190 E2
3191 E2
3192 D2
3193 D2
3194 D2
3196 F3
3197 F4
3198 F3
3199 F4
3215 C2
3219 C2
3230 A3
3231 B3
3233 B2
3234 B2
3235 A2
3236 B2
3237 B2
3250 C5
3251 C4
3252 D5
3253 D5
3254 C4
3255 C4
3256 D4
3257 D4
3258 C4
3259 C4
3260 D4
3261 C3
3262 C3
3263 D3
3264 D5
3266 E10
3270 B8
3271 A8
3272 D3
3273 D2
3274 D2
3275 E2
3276 D3
3277 E2
3278 D3
3279 D3
3280 D3
3281 E3
3778 B10
6000 F9
6001 E5
6002 E5
6003 F5
6020 D7
6021 D6
6022 E5
6023 E5
6024 D8
6025 D9
6026 D9
6027 C9
6028 C9
6029 B8
6030 D7
6031 D7
6032 C8
6033 C9
6034 E4
6035 E5
6036 D5
6037 B9
6038 B10
6100 E5
6101 D5
6102 D5
6103 D4
6104 D5
6105 B5
6106 D5
6107 C5
6108 C6
6109 E5
6180 E2
6181 E10
6182 D10
6230 A2
6250 C4
6251 C4
6255 C3
6256 D3
6260 E9
7000 E9
7001 F9
7002 F7
7003 E6
7004 E8
7005 E7
7006 F6
7007 E8
7020 E6
7021 D6
7022 D7
7024 D6
7026 D8
7027 D9
7028 D9
7029 D9
7030 D9
7031 D9
7032 C9
7033 C9
7034 C9
7035 D7
7036 B7
7037 C7
7038 C8
7039 D8
7040 C9
7041 D8
7042 C8
7043 C8
7044 D8
7045 D8
7046 D8
7047 C10
7100 E5
7101 E4
7102 C6
7103 B6
7104 C5
7105 C6
7106 B3
7107 B4
7140 B5
7142 B5
7160 B4
7161 B4
7180 F2
7181 E2
7230 B2
7231 A2
7250 C4
7251 C4
7252 D4
7253 C4
7254 D3
7255 C3
7256 D2
7257 E3

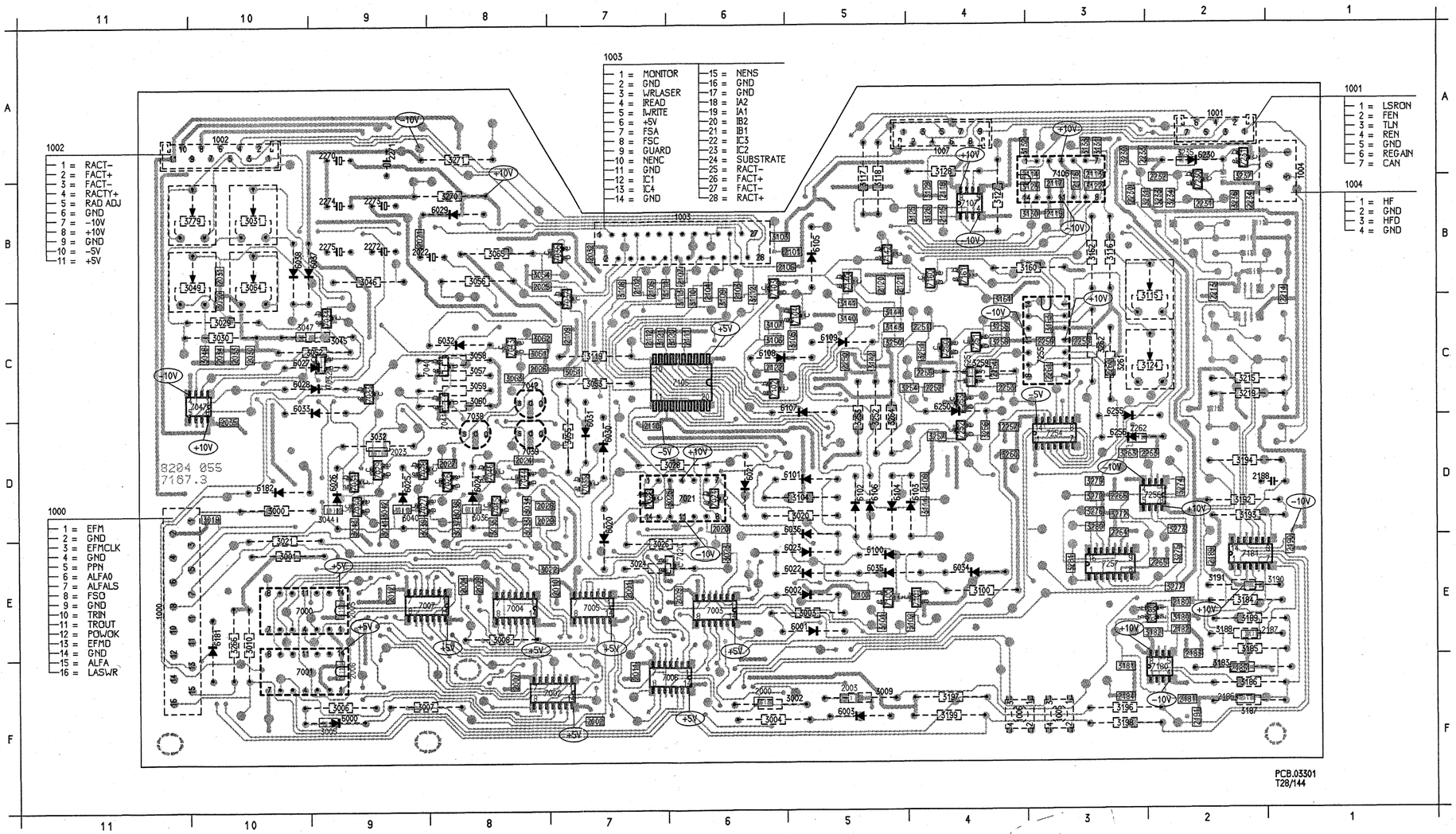

WOSP CIRCUIT DIAGRAM

WOSP - 2

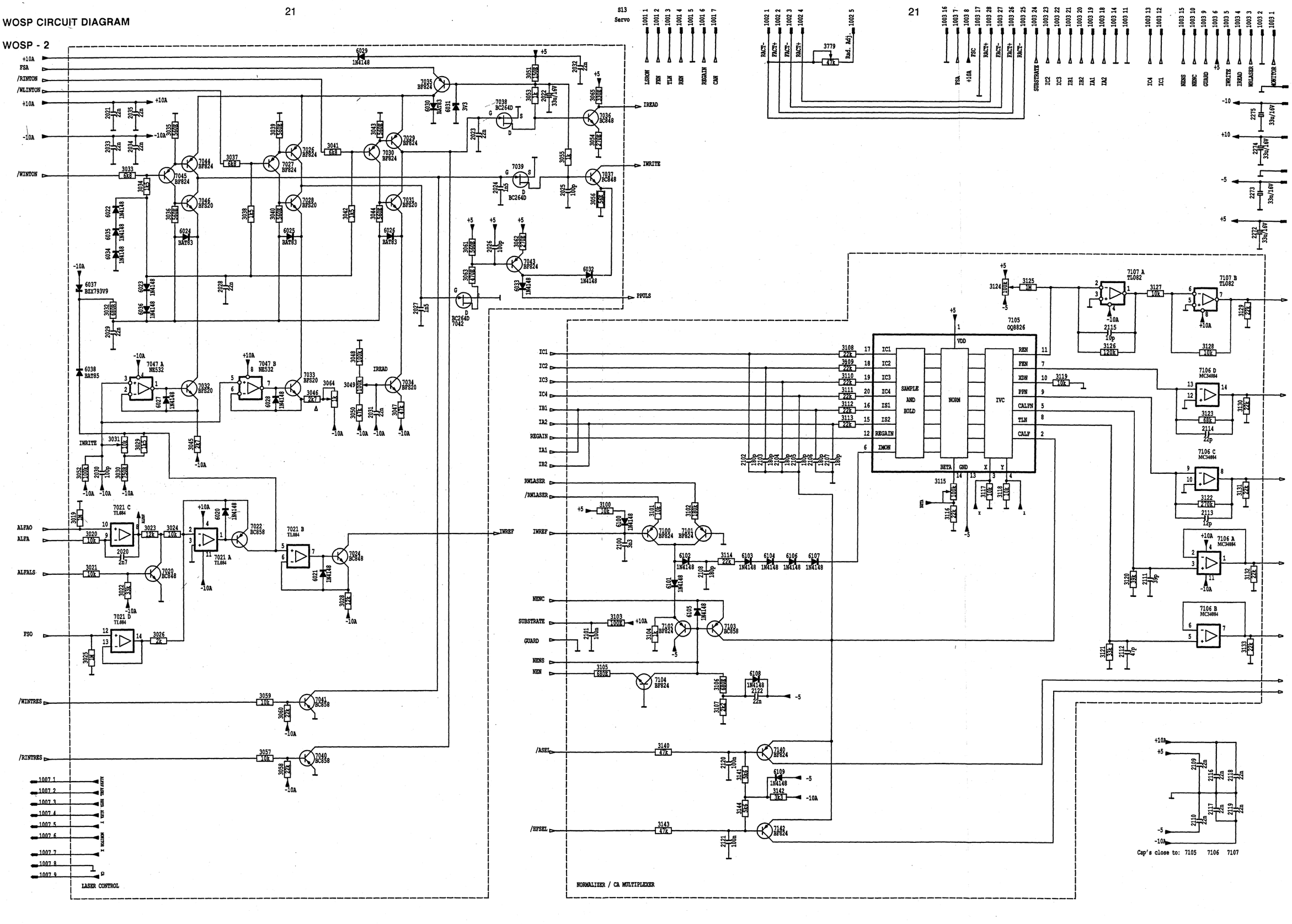

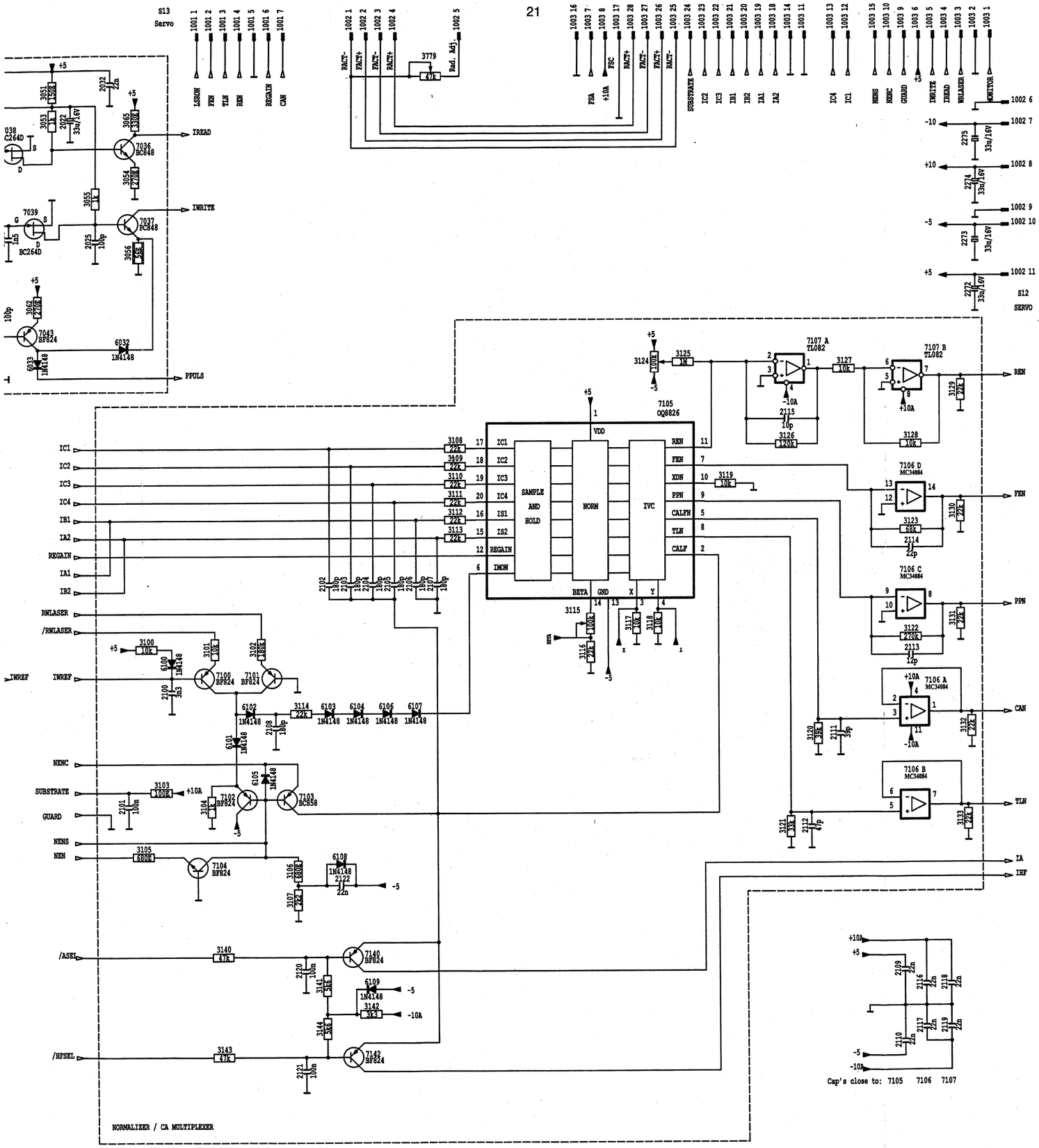

21

WOSP-2

ALFA	- Actual Absorption
ALFA0	- Absorption Set
ASEL	- CA Current Select
CALF	- Central Apperture Low Frequency
CALFN	- Central Apperture Low Frequency Normalized
CAN	- Central Apperture Normalized
FACT+ -	- Focus Actuator
FEN	- Focus Error Normalized
FSA	- Forward Sence Diode Anode
FSO	- Forward Sense Diode Reference Current
HFSEL	- Select CA Current For HF Reading Purposes
IB1-2	- 3 Spot Push Pull Diode Current
IC1-4	- 3 Spot Push Pull Diode Current
IHF	- CA Current To Remainder Part Of CA Processor
IMON	- Monitor Current
IWREF	- Laser Writing Power Reference
LSRON	- Laser On
NEN	- Enable All Photodiode Currents To Normalizer
NENC	- Enable Central Photodiode Currents To Normalizer
NENS	- Enable Satellite Photodiode Currents To Normalizer
PPN	- Normalized Push Pull Signal
RACT+ -	- Radial Actuator
REGAIN	- Radial Gain Current
REN	- Normalized Radial Error
RINTON	- Read Integrator On
RINTRES	- Read Integrator Reset
RWLASER	- Read/Non Write Laserpower
TLN	- Trackloss Normalized
WINTON	- Write Integrator On
WINTRES	- Write Integrator Reset
WLINTON	- Write Integrator On

CDR : flowchart start-up

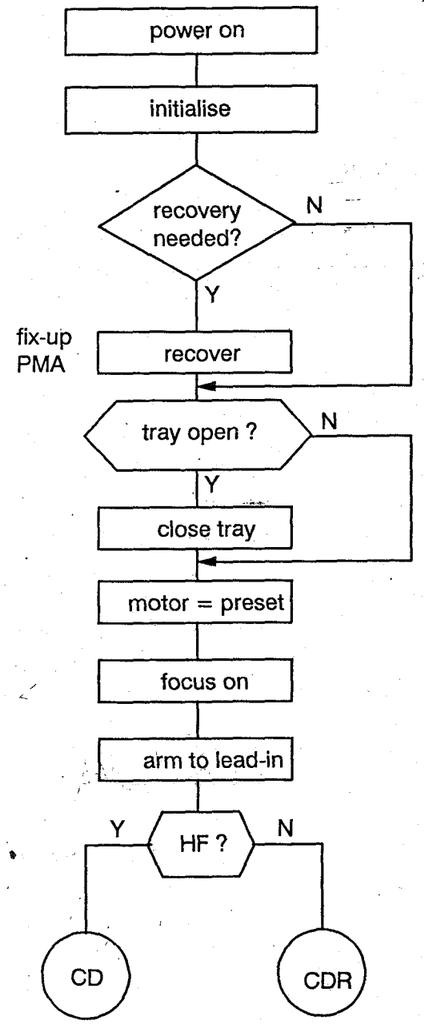

IN	OUT
AC MAINS	Supply Voltages KILL, KL, DRST OFF, RESET
RESET	SRST
	update PMA
TRIN, TROUT	TRMOT, LMOT TRIN
SRDAT, SRCMC	MCESSEL, MOT MREADY
MCESSEL, FOCON CAN, FEN	FACT, FOCOK
SLLS, SLIN	SLMOT, SLBS
HFSEL, IHF	EFMD

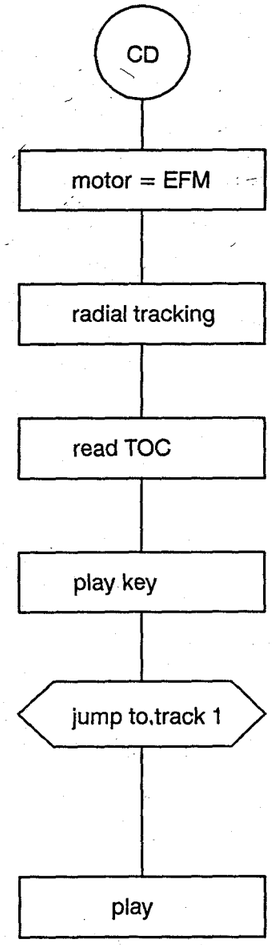

IN	OUT
MCSEL, HF, MSC, MERR	MOT
REN, SLLS	RACT, SLMOT
HF, QCL, QRA	QDA
RJEN, RJV1-7, SLLS	SLMOT, RACT

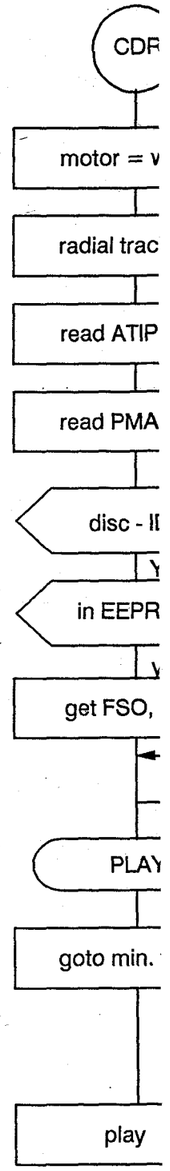

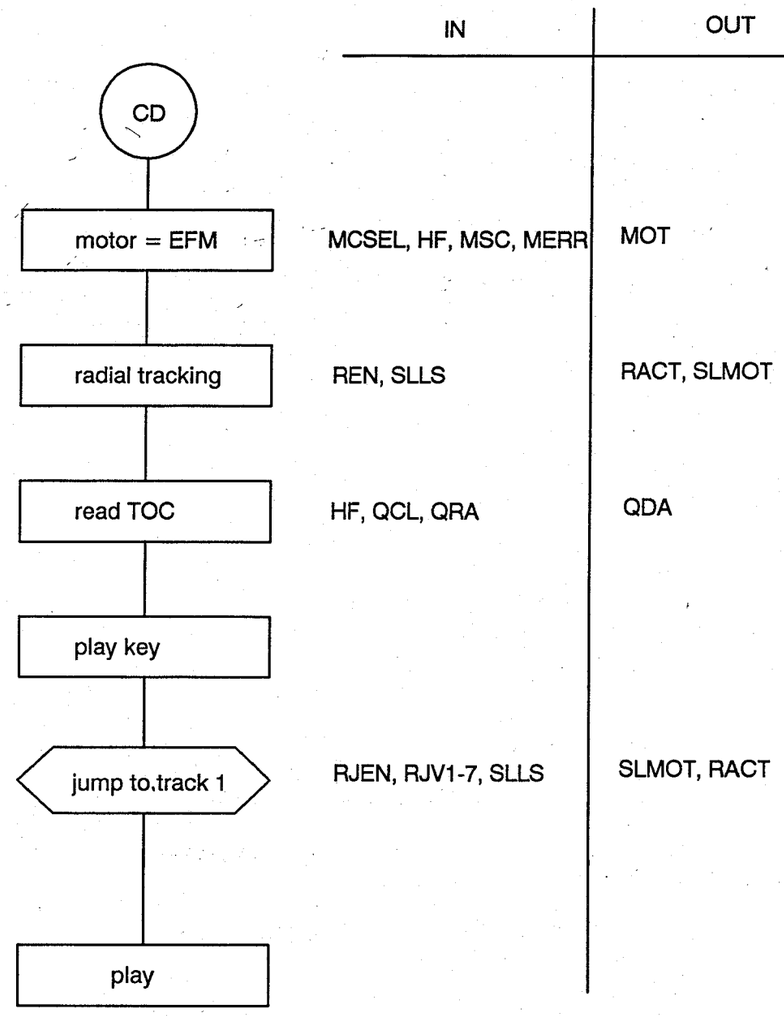
IN
OUT
CD
motor = EFM
MCSEL, HF, MSC, MERR
MOT
radial tracking
REN, SLLS
RACT, SLMOT
read TOC
HF, QCL, QRA
QDA
play key
jump to.track 1
RJEN, RJV1-7, SLLS
SLMOT, RACT
play

38

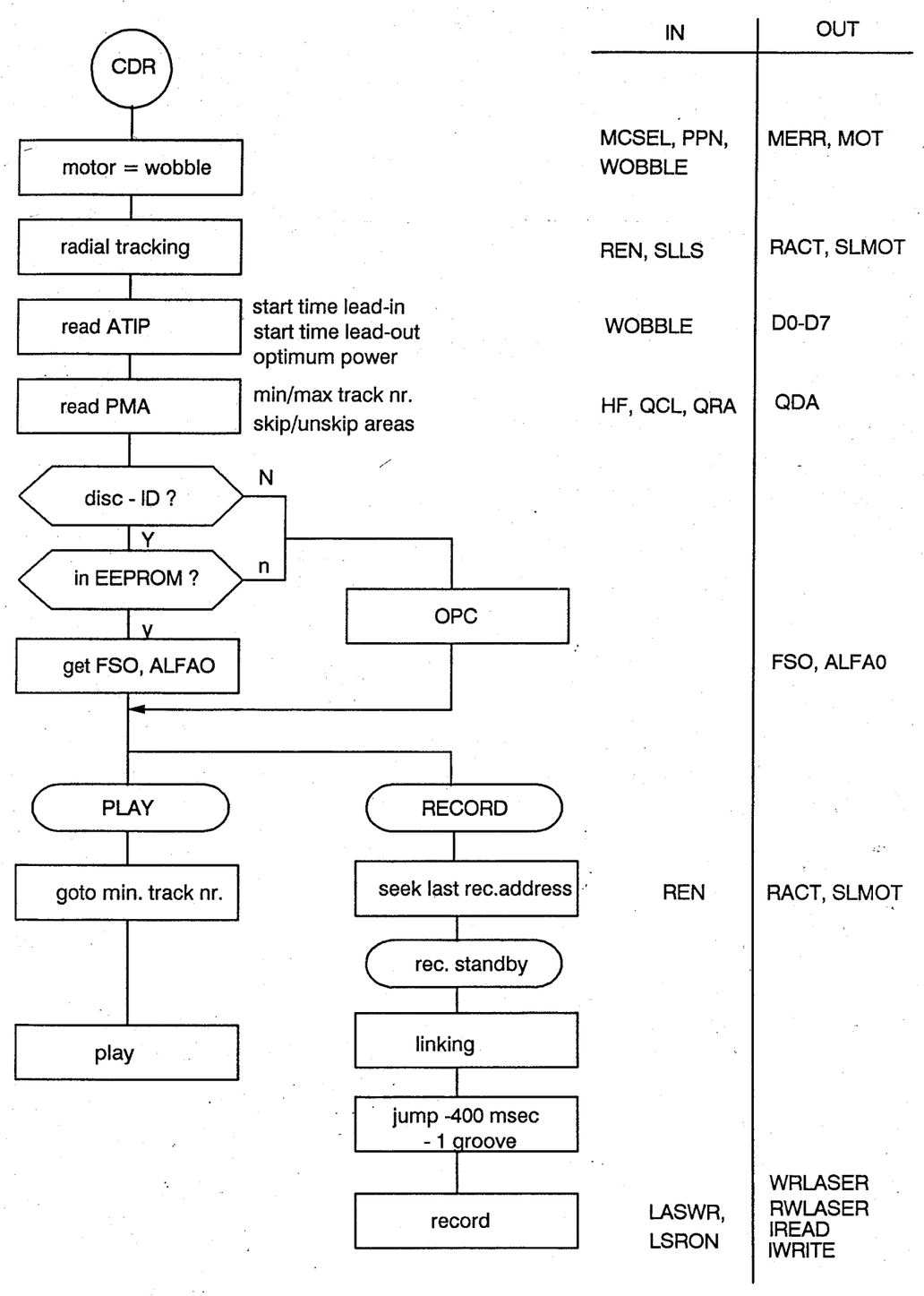
IN
OUT
CDR
motor = wobble
MCSEL, PPN, WOBBLE
MERR, MOT
radial tracking
REN, SLLS
RACT, SLMOT
read ATIP
start time lead-in
start time lead-out
optimum power
WOBBLE
D0-D7
read PMA
min/max track nr.
skip/unskip areas
HF, QCL, QRA
QDA
disc - ID ?
N
Y
in EEPROM ?
n
y
OPC
get FSO, ALFAO
FSO, ALFA0
PLAY
RECORD
goto min. track nr.
seek last rec.address
REN
RACT, SLMOT
rec. standby
play
linking
jump -400 msec
- 1 groove
record
LASWR,
LSRON
WRLASER
RWLASER
IREAD
IWRITE

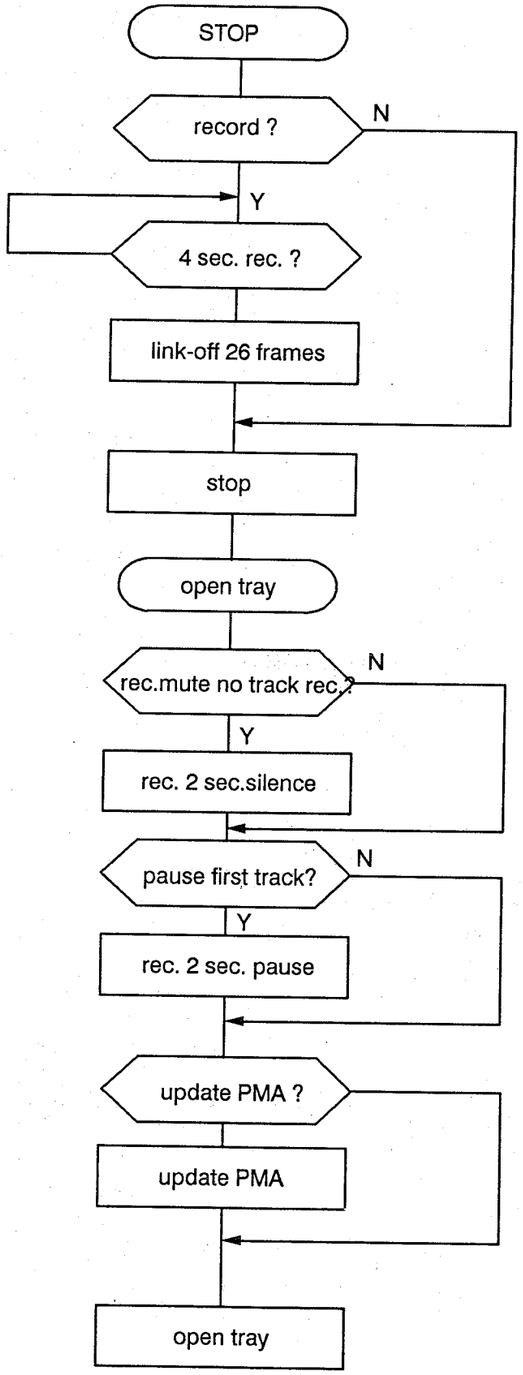

each step:
on error: try 5 X
then open tray
disc destroyed

39

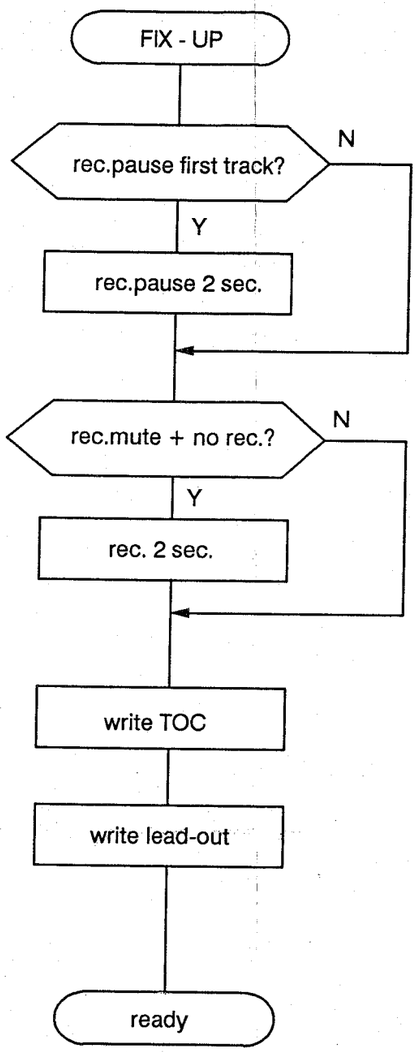

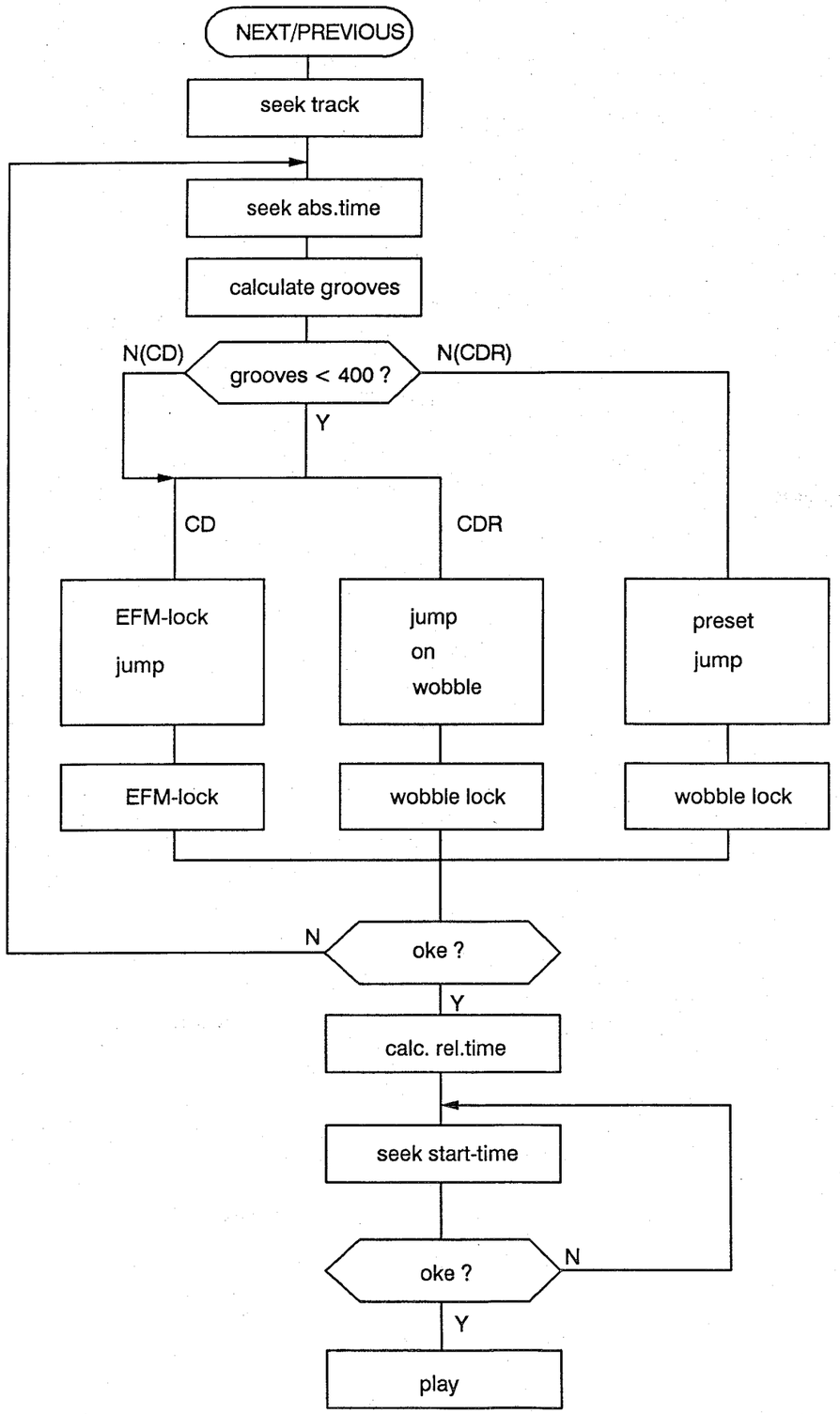

FAULTFINDING DIAGNOSIS

WOSP

-set upside down

Remove bottomplate

- Visual control: are all the solderings ok? (transistors, IC's)

- Check safety resistors

- Check all voltages (on connectors, IC's)

- Check actuator (ohmic)
on flex connector 1003 on WOSP
Radial actuator: points 25 - 28
Focus actuator : points 26 - 27

- Open the set

Remove the clamper

- Actuator is visible:
Press play: turntable motor turns
focus 2x pumping
laserlight
ok

- Actuator is inside:
Press play: turntable motor turns a few seconds
no focus
no laserlight
slide switch is not closed
(wiring or switch)

- Test of turntable motor:
(Black connector) External 1V on motor

- Test of slidemotor:
(Grey connector) External -1V: slide goes outwards
+1V: slide goes inwards

- Test of slidebeginswitch:
(Red connector) When slide is inside: 0Ω

INSTRUCTION TO REPLACE CDM-UNIT OR ENCODER PCB (ONLY FOR SOFTWARE FASE 1)

By replacing the CDM-unit and/or the Encoder PCB problems can occur with wrong OPC values or TOC tables. To prevent these problems, the EEPROM (IC 7481) has to be cleared.
After replacing the CDM-unit and/or the Encoder PCB, this can be done as follows:

1. Power off.
2. Connect pin 2 (A16) to pin 16 (GND) of IC 7481 (situated on Encoder PCB coordinates F1) by means of e.g. miniature clips.
3. Power on.
4. Press 11 (two times one)
5. Press FIX UP
6. After ± 20 seconds, the display shows 01: the EEPROM has been cleared. If the display shows 00: the EEPROM is defective.
7. Power off.
8. Remove the connection.

42

EXPLODED VIEWS

CABINET

MECHANICAL PARTSLIST

131	4822 691 30273	MECH.UNIT CD-PL CDM CDR
132	4822 462 41397	FOOT
133	4822 466 40577	FELT
503	4822 444 60799	COVER
	4822 444 50674	REAR COVER
	4822 411 61674	SELECT KNOB
1001	4822 214 51931	SERVO PCB
1002	4822 214 51932	ENCODER PCB
1502	4822 276 11309	POWER SWITCH
	4822 146 31048	TRANSFORMER UNIT

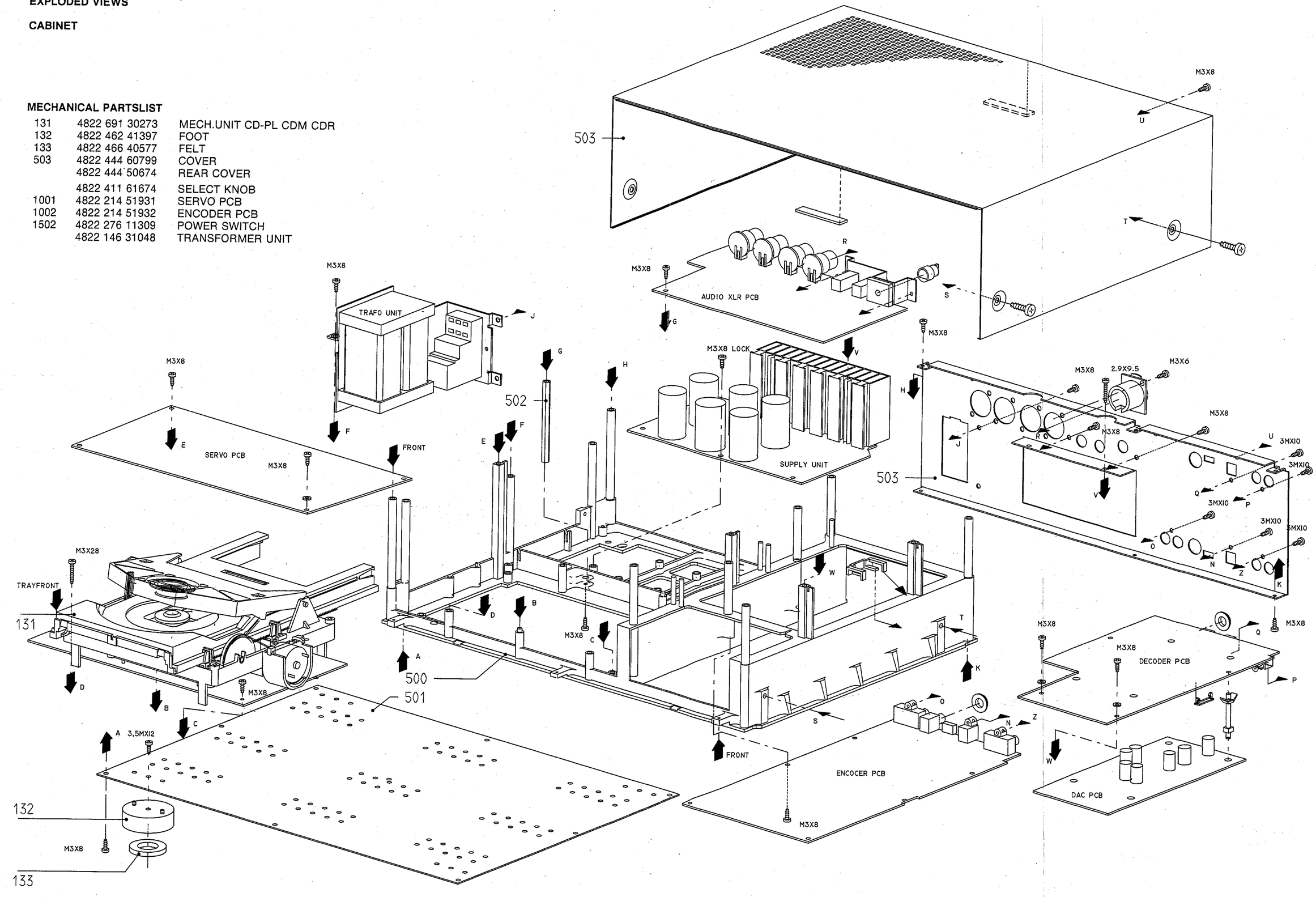

EVA.01297

43

FRONT

MECHANICAL PARTSLIST

101	4822 444 40524	TRAY FRONT
102	4822 444 40523	ALU TRAY FRONT
103	4822 410 60358	POWER BUTTON
104	4822 402 612407	LEFT ARM
106	4822 413 41699	REC LEVEL KNOB
107	4822 411 61856	PHONES VOLUME KNOB
108	4822 325 60317	GROMMET
109	4822 410 61724	ALU BUTTON SET
111	4822 410 90169	ALU COVER (BUTT)
112	4822 466 92936	DAMPER (L.ARM)
113	4822 411 61855	BALANCE KNOB
114	4822 444 40526	ALU FRONT
115	4822 444 40525	FRONT
116	4822 444 60812	COVER
118	4822 444 60813	COVER PLATE BUTTON
119	4822 444 60814	ALU DOOR
121	4822 460 20802	MASK
122	4822 450 61836	WINDOW
123	4822 410 61727	15F PUSH BUTTON
124	4822 381 11306	DIG/AUTO LENS
126	4822 492 71042	SPRING (R. ARM)
127	4822 492 71043	LEAF SPRING (R. ARM)
128	4822 402 61408	RIGHT ARM
129	4822 492 71041	SPRING (R. ARM)
131	4822 402 61409	MOVEMENT
132	4822 410 61726	4F PUSH BUTTON
133	4822 381 11305	RECORDING LENS
134	4822 410 61725	6F PUSH BUTTON
	4822 381 11307	PLAY LENS
	4822 321 10794	CORD SET
	4822 218 10325	REMOTE CONTROL RD5860/00
	4822 444 40528	SIDE PANEL LEFT
	4822 444 40527	SIDE PANEL RIGHT
	4822 498 10438	HANDLE

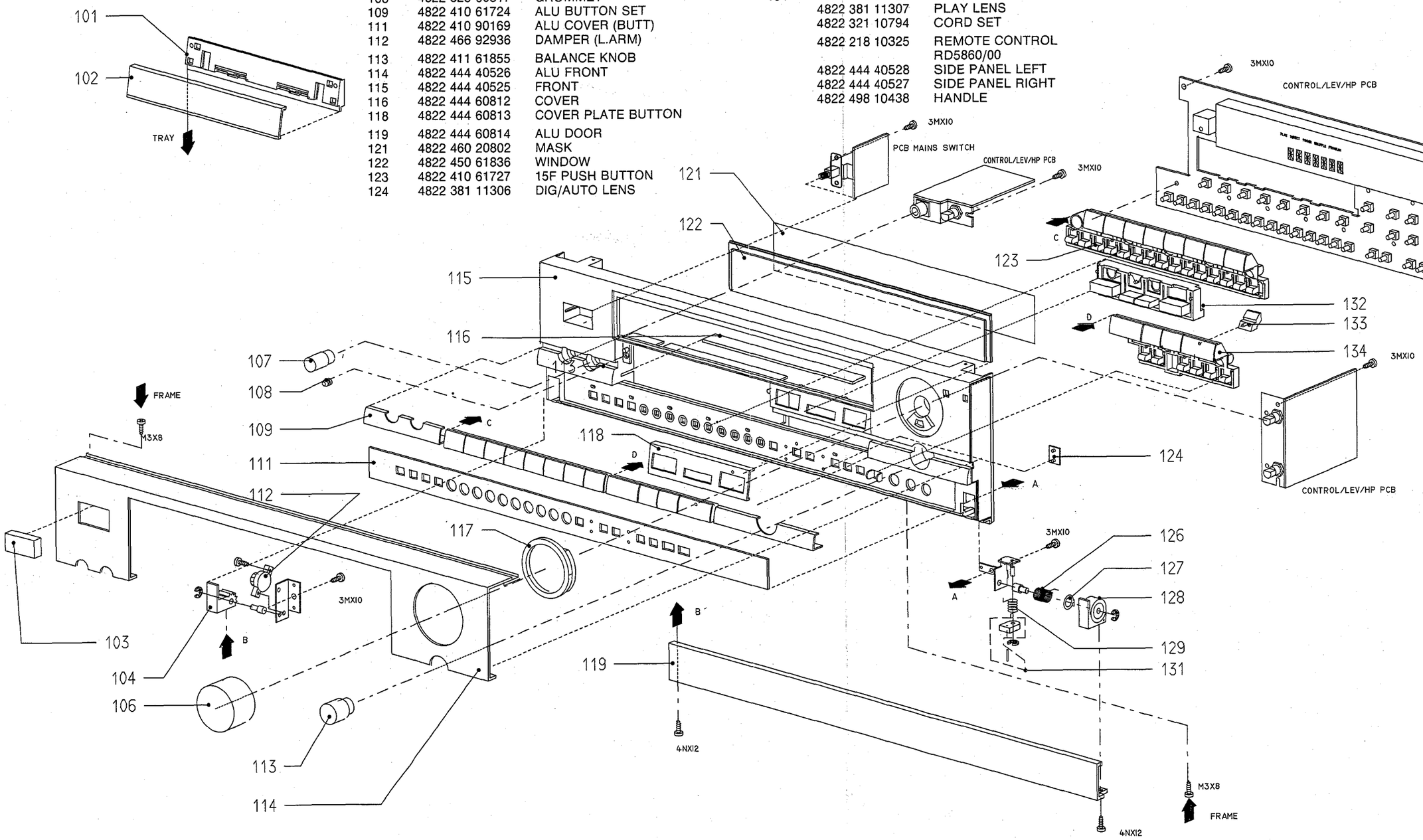

EVA.01299

44

MECHANICAL PARTSLIST

101	4822 532 52386	PRESSURE RING ASSY
102	4822 466 93048	GUIDE
103	4822 492 52295	COMPRESSION SPRING 140
104	4822 466 62092	FOAM
106	4822 492 52295	COMPRESSION SPRING
107	4822 492 32883	SPRING,TENSION
108	4822 358 10115	BELT,DRIVING
	4822 361 21423	MOTOR + PULLEY
	4822 466 93047	PRESSURE PLATE

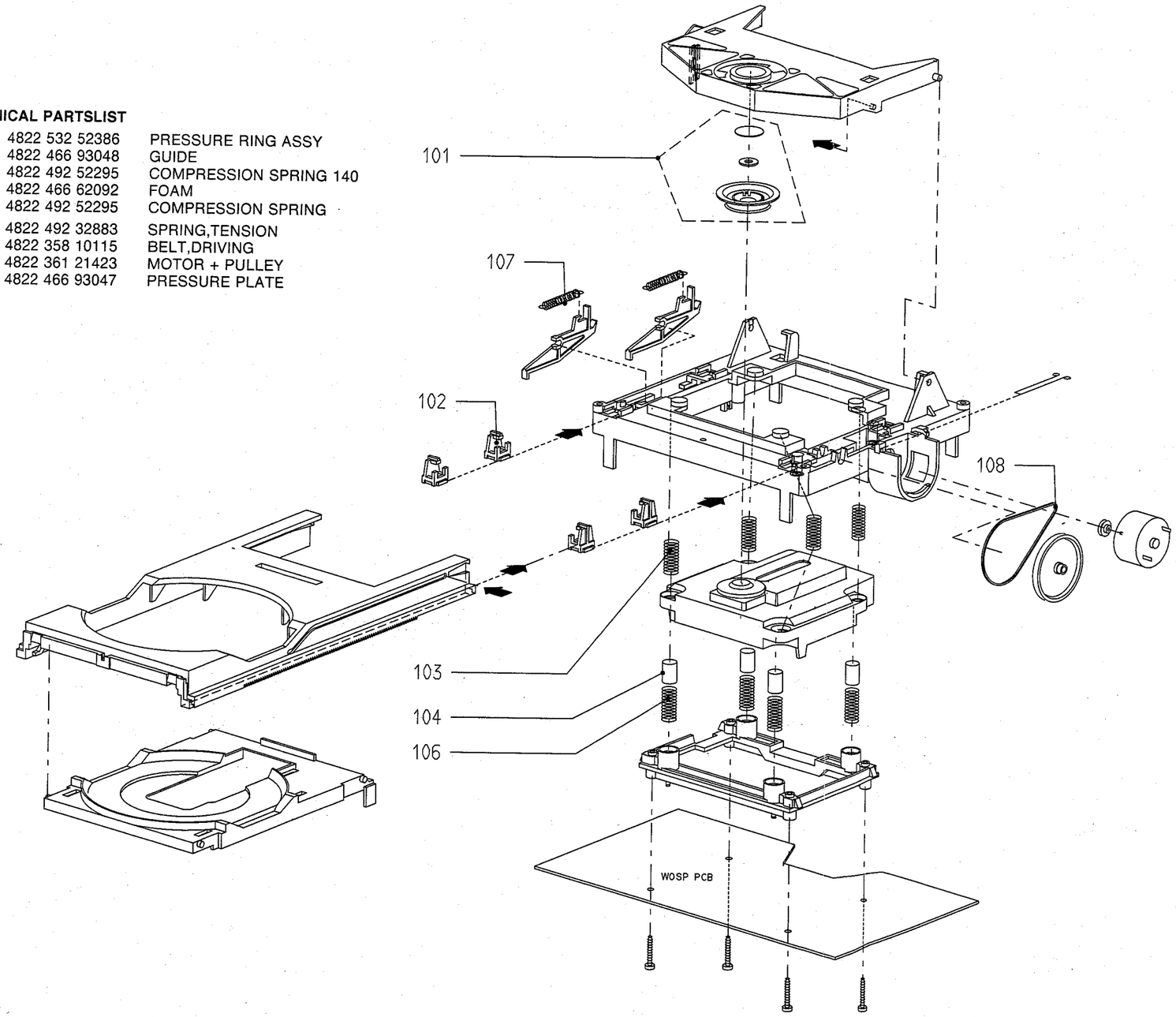

EVA.01295

45

Miscellaneous

1001	4822 214 51931	SERVO PCB

Crystal

1500	4822 242 73759	12MHz

2500	5322 122 32658	22pF 5% 50V
2501	5322 122 32658	22pF 5% 50V
2502	5322 124 21643	22µF 20% 40V
2503	4822 122 33809	22nF 20% 50V
2521	4822 122 33175	2,2nF 20% 50V
2522	4822 122 33809	22nF 20% 50V
2523	4822 122 33809	22nF 20% 50V
2524	5322 122 33809	22nF 20% 50V
2525	4822 122 33809	22nF 20% 50V
2526	5322 121 42661	330nF 5% 63V
2527	4822 122 33809	22nF 20% 50V
2528	4822 122 33809	22nF 20% 50V
2540	4822 122 33809	22nF 20% 50V
2541	4822 122 33496	100nF 10% 63V
2542	4822 122 33543	15nF 10% 50V
2543	4822 122 33496	100nF 10% 63V
2560	4822 122 32891	68nF 10% 63V
2561	4822 122 33891	3,3nF 10% 63V
2562	5322 122 32531	100pF 5% 50V
2563	4822 122 33177	10nF 20% 50V
2564	4822 122 32575	220pF 10% 500V
2565	4822 122 33809	22nF 20% 50V
2566	4822 122 33809	22nF 20% 50V
2567	4822 122 32542	47nF 10% 63V
2568	5322 122 32531	100pF 5% 50V
2580	4822 122 33809	22nF 20% 50V
2581	4822 122 33809	22nF 20% 50V
2582	5322 122 34123	1nF 10% 50V
2583	4822 122 33809	22nF 20% 50V
2584	4822 122 33809	22nF 20% 50V
2600	4822 122 33809	22nF 20% 50V
2601	4822 122 33809	22nF 20% 50V
2602	5322 122 32531	100pF 5% 50V
2603	4822 122 33496	100nF 10% 63V
2604	4822 121 41854	150nF 5% 63V
2605	4822 122 33175	2,2nF 20% 50V
2606	4822 122 33496	100nF 10% 63V
2620	5322 124 21643	22µF 20% 40V
2630	4822 121 51252	470nF 5% 63V
2640	4822 121 43901	4,7nF 5% 50V
2641	4822 121 43867	22nF 5% 50V
2642	5322 122 32448	10pF 5% 50V
2645	4822 122 33496	100nF 10% 63V
2650	4822 122 33177	10nF 20% 50V
2651	4822 122 33809	22nF 20% 50V
2652	4822 122 33809	22nF 20% 50V
2653	4822 122 33496	100nF 10% 63V
2654	4822 122 33496	100nF 10% 63V
2660	4822 124 40272	33µF 20% 16V
2661	4822 122 33809	22nF 20% 50V
2662	4822 124 40272	33µF 20% 16V
2663	4822 122 33809	22nF 20% 50V
2664	4822 124 41596	22µF 20% 50V
2665	4822 122 33809	22nF 20% 50V
2666	4822 124 41596	22µF 20% 50V
2667	4822 122 33809	22nF 20% 50V
2669	5322 124 21643	22µF 20% 40V
2671	5322 124 21643	22µF 20% 40V
2680	5322 122 31863	330pF 5% 50V
2681	5322 122 31863	330pF 5% 50V
2682	4822 122 33809	22nF 20% 50V
2710	4822 122 33809	22nF 20% 50V
2711	4822 122 33809	22nF 20% 50V
2712	5322 122 32658	22pF 5% 50V
2713	5322 122 32658	22pF 5% 50V
2730	4822 122 33809	22nF 20% 50V
2740	4822 122 31775	680pF 5% 50V
2751	5322 121 42386	100nF 5% 63V
2752	4822 121 43869	68nF 5% 50V
2770	5322 121 42661	330nF 5% 63V
2771	5322 122 32659	33pF 5% 50V
2772	4822 122 33809	22nF 20% 50V
2773	4822 122 33809	22nF 20% 50V
2774	4822 122 33809	22nF 20% 50V
2775	4822 122 33809	22nF 20% 50V
2790	4822 122 33809	22nF 20% 50V
2791	4822 122 33543	15nF 10% 50V
2792	4822 122 33809	22nF 20% 50V
2793	4822 122 33809	22nF 20% 50V
2794	4822 122 33496	100nF 10% 63V
2795	4822 121 43526	47nF 5% 100V
2810	4822 122 33809	22nF 20% 50V
2811	4822 122 33809	22nF 20% 50V
2812	4822 122 33809	22nF 20% 50V
2814	4822 122 33809	22nF 20% 50V
2830	4822 124 40272	33µF 20% 16V
2850	4822 122 33342	33nF 10% 50V
2851	5322 121 42661	330nF 5% 63V
2852	4822 122 33809	22nF 20% 50V
2853	4822 122 33809	22nF 20% 50V
2854	4822 122 33496	100nF 10% 63V
2870	4822 122 33809	22nF 20% 50V
2871	4822 122 33809	22nF 20% 50V
2872	5322 122 32531	100pF 5% 50V
2873	4822 122 32542	47nF 10% 63V
2874	4822 122 32575	220pF 10% 500V

3500	4822 050 21002	1k 1% 0,6W
3501	4822 050 21002	1k 1% 0,6W
3502	4822 052 10108	1Ω 5% 0,33W
3503	4822 050 21003	10k 1% 0,6W
3504	4822 050 21003	10k 1% 0,6W
3506	4822 050 21003	10k 1% 0,6W
3507	4822 050 21003	10k 1% 0,6W
3508	4822 050 21003	10k 1% 0,6W
3509	4822 050 21003	10k 1% 0,6W
3510	4822 050 22203	22k 1% 0,6W
3511	4822 050 22203	22k 1% 0,6W
3512	4822 050 22203	22k 1% 0,6W
3513	4822 050 21002	1k 1% 0,6W
3514	4822 051 10101	100Ω 2% 0,25W
3515	4822 050 21003	10k 1% 0,6W
3516	4822 050 21003	10k 1% 0,6W
3517	4822 050 21003	10k 1% 0,6W
3518	4822 050 21003	10k 1% 0,6W
3519	4822 050 21003	10k 1% 0,6W
3520	4822 050 28203	82k 1% 0,6W
3521	4822 116 52235	1M 5% 0,5W
3522	4822 050 25604	560k 1% 0,6W
3523	4822 050 21804	180k 1% 0,6W
3524	4822 116 52235	1M 5% 0,5W
3525	4822 050 22704	270k 1% 0,6W
3526	4822 051 20274	270k 5% 0,1W
3527	4822 116 52272	330k 5% 0,5W
3528	4822 050 21204	120k 1% 0,6W
3529	4822 050 24703	47k 1% 0,6W
3530	4822 051 20105	1M 5% 0,1W
3531	4822 116 52244	15k 5% 0,5W
3532	4822 051 20473	47k 5% 0,1W
3533	4822 050 25603	56k 1% 0,6W
3534	4822 051 20473	47k 5% 0,1W
3535	4822 051 20682	6k8 5% 0,1W
3542	4822 116 52234	100k 5% 0,5W
3545	4822 050 22003	20k 1% 0,6W
3546	4822 116 52264	27k 5% 0,5W
3547	4822 050 24704	470k 1% 0,6W
3550	4822 116 52235	1M 5% 0,5W
3551	4822 050 21003	10k 1% 0,6W
3552	4822 050 13303	33k 1% 0,4W
3560	4822 050 13303	33k 1% 0,4W
3561	4822 050 22204	220k 1% 0,6W
3562	4822 050 25603	56k 1% 0,6W
3563	4822 050 22204	220k 1% 0,6W
3564	4822 050 13303	33k 1% 0,4W
3565	4822 050 25603	56k 1% 0,6W
3566	4822 050 22203	22k 1% 0,6W
3567	4822 050 13303	33k 1% 0,4W
3568	4822 050 23902	3k9 1% 0,6W
3569	4822 050 23902	3k9 1% 0,6W
3570	4822 050 26803	68k 1% 0,6W
3571	4822 050 24703	47k 1% 0,6W
3572	4822 050 21504	150k 1% 0,6W
3573	4822 050 21804	180k 1% 0,6W
3574	4822 116 52264	27k 5% 0,5W
3575	4822 050 22203	22k 1% 0,6W
3576	4822 050 22203	22k 1% 0,6W
3577	4822 050 21204	120k 1% 0,6W
3578	4822 050 21504	150k 1% 0,6W
3580	4822 050 13303	33k 1% 0,4W
3581	4822 050 24703	47k 1% 0,6W
3582	4822 116 52235	1M 5% 0,5W
3583	4822 116 52224	470Ω 5%0,5W
3584	4822 052 10108	1Ω 5% 0,33W
3585	4822 052 10108	1Ω 5% 0,33W
3586	4822 050 21003	10k 1% 0,6W
3600	4822 050 22203	22k 1% 0,6W
3601	4822 050 21003	10k 1% 0,6W
3602	4822 050 22203	22k 1% 0,6W
3603	4822 050 22704	270k 1% 0,6W
3604	4822 050 21003	10k 1% 0,6W
3605	4822 050 22203	22k 1% 0,6W
3606	4822 050 21003	10k 1% 0,6W
3607	4822 050 24702	4k7 1% 0,6W
3608	4822 050 22203	22k 1% 0,6W
3609	4822 050 26803	68k 1% 0,6W
3610	4822 050 22204	220k 1% 0,6W
3611	4822 116 52234	100k 5% 0,5W
3612	4822 050 13303	33k 1% 0,4W
3614	4822 050 21203	12k 1% 0,6W
3615	4822 050 13303	33k 1% 0,4W
3616	4822 050 22203	22k 1% 0,6W
3617	4822 050 24704	470k 1% 0,6W
3620	4822 050 22203	22k 1% 0,6W
3621	4822 052 10108	1Ω 5% 0,33W
3622	4822 052 10108	1Ω 5% 0,33W
3623	4822 052 10108	1Ω 5% 0,33W
3624	4822 052 10108	1Ω 5% 0,33W
3625	4822 052 10108	1Ω 5% 0,33W
3626	4822 052 10108	1Ω 5% 0,33W
3630	4822 050 26804	680k 1% 0,6W
3631	4822 050 26804	680k 1% 0,6W
3632	4822 050 26804	680k 1% 0,6W
3640	4822 050 28203	82k 1% 0,6W
3641	4822 050 13303	33k 1% 0,4W
3642	4822 116 52235	1M 5% 0,5W
3643	4822 050 25603	56k 1% 0,6W
3644	4822 116 52264	27k 5% 0,5W
3645	4822 116 52234	100k 5% 0,5W
3646	4822 050 24704	470k 1% 0,6W
3647	4822 116 52234	100k 5% 0,5W
3648	4822 116 52264	27k 5% 0,5W
3649	4822 052 10229	22Ω 5% 0,33W
3650	4822 050 23902	3k9 1% 0,6W
3651	4822 050 21203	12k 1% 0,6W
3652	4822 050 21203	12k 1% 0,6W
3653	4822 052 10108	1Ω 5% 0,33W
3654	4822 050 21203	12k 1% 0,6W
3655	4822 050 21203	12k 1% 0,6W
3656	4822 052 10108	1Ω 5% 0,33W
3657	4822 052 10229	22Ω 5% 0,33W
3680	4822 050 21003	10k 1% 0,6W
3681	4822 050 22204	220k 1% 0,6W
3682	4822 050 21002	1k 1% 0,6W
3683	4822 050 21002	1k 1% 0,6W
3684	4822 116 52244	15k 5% 0,5W
3685	4822 050 28203	82k 1% 0,6W
3686	4822 050 28203	82k 1% 0,6W
3687	4822 116 52244	15k 5% 0,5W
3688	4822 050 21002	1k 1% 0,6W
3689	4822 050 21002	1k 1% 0,6W
3690	4822 050 21003	10k 1% 0,6W
3691	4822 050 21003	10k 1% 0,6W
3692	4822 050 21002	1k 1% 0,6W
3693	4822 050 22203	22k 1% 0,6W
3694	4822 050 22203	22k 1% 0,6W
3695	4822 050 22203	22k 1% 0,6W
3696	4822 050 26803	68k 1% 0,6W
3697	4822 050 21002	1k 1% 0,6W
3710	4822 050 21002	1k 1% 0,6W
3711	4822 050 22204	220k 1% 0,6W
3712	4822 050 21003	10k 1% 0,6W
3713	4822 050 21002	1k 1% 0,6W
3715	4822 050 21003	10k 1% 0,6W
3740	4822 050 24304	430k 5% 0,125W
3741	4822 050 23903	39k 5% 0,125W
3742	4822 050 21203	12k 1% 0,6W
3743	4822 116 52244	15k 5% 0,5W
3744	4822 050 15602	5k6 1% 0,4W
3745	4822 050 15602	5k6 1% 0,4W
3750	4822 050 22704	270k 1% 0,6W
3751	4822 116 52224	470Ω 5% 0,5W
3752	4822 050 21204	120k 5% 0,125W
3753	4822 050 21203	12k 5% 0,125W
3754	4822 050 22704	270k 5% 0,125W
3755	4822 050 21002	1k 1% 0,6W
3756	4822 050 27504	750k 5% 0,125W
3757	4822 050 13303	33k 1% 0,4W
3770	4822 050 26803	68k 1% 0,6W
3771	4822 050 23903	39k 5% 0,125W
3772	4822 050 24703	47k 1% 0,6W
3773	4822 116 52244	15k 5% 0,5W
3774	4822 052 10108	1Ω 5% 0,33W
3775	4822 116 52224	470Ω 5% 0,5W
3776	4822 116 52224	470Ω 5% 0,5W
3777	4822 116 52244	15k 5% 0,5W
3778	4822 052 10108	1Ω 5% 0,33W
3779	4822 050 23903	39k 5% 0,125W

3791	4822 050 15602	5k6 1% 0,4W
3792	4822 050 21002	1k 1% 0,6W
3793	4822 050 13303	33k 1% 0,4W
3794	4822 050 13303	33k 1% 0,4W
3795	4822 050 21003	10k 1% 0,6W
3796	4822 116 52234	100k 5% 0,5W
3797	4822 116 52272	330k 5% 0,5W
3799	4822 116 52235	1M 5% 0,5W
3800	4822 116 52235	1M 5% 0,5W
3801	4822 116 52272	330k 5% 0,5W
3810	4822 050 21003	10k 1% 0,6W
3811	4822 050 21003	10k 1% 0,6W
3813	4822 050 21804	180k 1% 0,6W
3814	4822 050 21804	180k 1% 0,6W
3830	4822 116 52234	100k 5% 0,5W
3831	4822 050 28203	82k 1% 0,6W
3832	4822 050 21002	1k 1% 0,6W
3833	4822 116 52234	100k 5% 0,5W
3834	4822 050 22202	2k2 1% 0,6W
3835	4822 050 24703	47k 1% 0,6W
3836	4822 050 24703	47k 1% 0,6W
3837	4822 050 24703	47k 1% 0,6W
3838	4822 050 24703	47k 1% 0,6W
3850	4822 116 52244	15k 5% 0,5W
3851	4822 116 52234	100k 5% 0,5W
3852	4822 050 15602	5k6 1% 0,4W
3853	4822 116 52272	330k 5% 0,5W
3854	4822 050 21002	1k 1% 0,6W
3855	4822 050 21003	10k 1% 0,6W
3856	4822 050 21003	10k 1% 0,6W
3857	4822 050 24703	47k 1% 0,6W
3858	4822 050 21203	12k 1% 0,6W
3859	4822 050 21003	10k 1% 0,6W
3860	4822 050 21003	10k 1% 0,6W
3861	4822 050 24703	47k 1% 0,6W
3862	4822 050 21203	12k 1% 0,6W
3863	4822 050 24703	47k 1% 0,6W
3864	4822 052 10229	22Ω 5% 0,33W
3865	4822 052 10108	1Ω 5% 0,33W
3866	4822 052 10108	1Ω 5% 0,33W
3867	4822 050 22203	22k 1% 0,6W
3871	4822 116 52264	27k 5% 0,5W
3872	4822 050 26803	68k 1% 0,6W
3873	4822 116 52234	100k 5% 0,5W
3874	4822 050 22704	270k 1% 0,6W
3875	4822 050 22203	22k 1% 0,6W
3876	4822 050 21002	1k 1% 0,6W
3877	4822 050 21002	1k 1% 0,6W
3880	4822 050 24703	47k 1% 0,6W
3881	4822 050 22203	22k 1% 0,6W
3882	4822 116 52272	330k 5% 0,5W
3883	4822 050 24703	47k 1% 0,6W
3884	4822 050 22704	270k 1% 0,6W
3885	4822 050 24703	47k 1% 0,6W
3886	4822 050 21504	150k 1% 0,6W
4001	4822 051 10008	Chip jumper
4002	4822 051 10008	Chip jumper
4003	4822 051 10008	Chip jumper
4004	4822 051 10008	Chip jumper
4005	4822 051 10008	Chip jumper
4006	4822 051 10008	Chip jumper
4007	4822 051 10008	Chip jumper
4008	4822 051 10008	Chip jumper
4009	4822 051 10008	Chip jumper
4010	4822 051 10008	Chip jumper

4011	4822 051 10008	Chip jumper
4012	4822 051 10008	Chip jumper
4013	4822 051 10008	Chip jumper
4014	4822 051 10008	Chip jumper
4015	4822 051 10008	Chip jumper
4016	4822 051 10008	Chip jumper
4017	4822 051 10008	Chip jumper
4018	4822 051 10008	Chip jumper
4019	4822 051 10008	Chip jumper
4020	4822 051 10008	Chip jumper
4021	4822 051 10008	Chip jumper
4022	4822 051 10008	Chip jumper
4023	4822 051 10008	Chip jumper
4024	4822 051 10008	Chip jumper
4025	4822 051 10008	Chip jumper
4026	4822 051 10008	Chip jumper
4027	4822 051 10008	Chip jumper
4028	4822 051 10008	Chip jumper
4029	4822 051 10008	Chip jumper
4030	4822 051 10008	Chip jumper
4031	4822 051 10008	Chip jumper
4032	4822 051 10008	Chip jumper
4033	4822 051 10008	Chip jumper
4034	4822 051 10008	Chip jumper
4035	4822 051 10008	Chip jumper
4036	4822 051 10008	Chip jumper
4037	4822 051 10008	Chip jumper
4038	4822 051 10008	Chip jumper
4039	4822 051 10008	Chip jumper
4040	4822 051 10008	Chip jumper
4041	4822 051 10008	Chip jumper
4042	4822 051 10008	Chip jumper
4043	4822 051 10008	Chip jumper
4044	4822 051 10008	Chip jumper
4045	4822 051 10008	Chip jumper
4046	4822 051 10008	Chip jumper
4047	4822 051 10008	Chip jumper
4049	4822 051 10008	Chip jumper
4050	4822 051 10008	Chip jumper
4051	4822 051 10008	Chip jumper
4052	4822 051 10008	Chip jumper
4053	4822 051 10008	Chip jumper
4054	4822 051 10008	Chip jumper
4055	4822 051 10008	Chip jumper

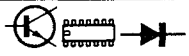

6530	4822 130 30621	1N4148
6531	4822 130 30621	1N4148
6540	4822 130 30621	1N4148
6561	4822 130 30621	1N4148
6562	4822 130 30621	1N4148
6563	4822 130 30621	1N4148
6580	4822 130 30861	BZX79-C7V5
6581	4822 130 30861	BZX79-C7V5
6600	4822 130 30621	1N4148
6601	4822 130 30621	1N4148
6602	4822 130 30621	1N4148
6603	4822 130 30621	1N4148
6604	4822 130 30621	1N4148
6605	4822 130 30621	1N4148
6606	5322 130 34563	BZX79-C2V7
6680	4822 130 30621	1N4148
6681	4822 130 30621	1N4148
6740	4822 130 34174	BZX79-C4V7
6741	4822 130 34174	BZX79-C4V7
6750	4822 130 34174	BZX79-C4V7

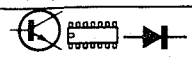

6751	4822 130 34174	BZX79-C4V7
6790	4822 130 30621	1N4148
6791	4822 130 30621	1N4148
6792	4822 130 30621	1N4148
6830	4822 130 30621	1N4148
6831	4822 130 30621	1N4148
6832	4822 130 30621	1N4148
6833	4822 130 30621	1N4148
6850	4822 130 34174	BZX79-C4V7
6851	4822 130 34174	BZX79-C4V7
6870	4822 130 31981	BZX79-C3V9
6871	4822 130 31981	BZX79-C3V9
6872	4822 130 31981	BZX79-C3V9
6873	4822 130 31981	BZX79-C3V9
6874	4822 130 30621	1N4148
7500	4822 209 30737	SC87C51CCN40
7501	4822 209 30731	MC74HC03AD
7520	4822 209 30725	MC34002BD
7521	5322 209 82941	LM358D
7522	4822 209 30734	MC74HC4053N
7540	4822 209 30733	MC74HC164N
7541	4822 209 30725	MC34002BD
7542	5322 130 44656	BC264D
7560	4822 209 30734	MC74HC4053N
7561	4822 130 61207	BC848
7562	5322 130 42012	BC858
7563	5322 209 70225	LM393D
7580	5322 130 44656	BC264D
7581	5322 130 44647	BC368
7582	5322 130 44593	BC369
7600	5322 130 42012	BC858
7601	4822 209 30725	MC34002BD
7602	4822 130 61207	BC848
7630	4822 130 61207	BC848
7640	5322 130 44656	BC264D

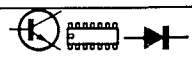

7641	5322 130 44656	BC264D
7642	4822 209 72587	TCA0372DP2
7680	4822 209 30732	LM319D
7681	4822 130 61207	BC848
7682	5322 130 42012	BC858
7683	4822 130 61207	BC848
7684	5322 130 42012	BC858
7685	4822 130 61207	BC848
7711	4822 130 61207	BC848
7712	4822 130 61207	BC848
7713	4822 209 30739	MC74HC04AD
7730	4822 209 30734	MC74HC4053N
7731	5322 209 73011	PC74HC4520P
7740	4822 209 30734	MC74HC4053N
7741	4822 209 30738	TL084CN
7750	4822 209 30734	MC74HC4053N
7770	4822 130 61207	BC848
7771	5322 130 42012	BC858
7772	4822 130 40995	BD438
7773	4822 130 40982	BD437
7790	4822 209 30733	MC74HC164N
7791	4822 209 30738	TL084CN
7792	5322 130 42012	BC858
7810	4822 209 30739	MC74HC04AD
7811	4822 209 30734	MC74HC4053N
7830	4822 209 70941	MC34084P
7850	5322 130 42012	BC858
7851	5322 130 42012	BC858
7852	4822 209 72587	TCA0372DP2
7870	5322 209 70225	LM393D
7871	4822 209 30734	MC74HC4053N
7880	5322 130 42012	BC858
7881	4822 130 61207	BC848

ENCODER PANEL

Miscellaneous		
1002	4822 214 51932	ENCODER PCB
Crystal		
1424	4822 242 71349	11,2896 MHz
1480	4822 242 73759	12MHz
⊣⊢		
2300	5322 122 32531	100pF 5% 50V
2301	5322 122 32531	100pF 5% 50V
2304	5322 122 32531	100pF 5% 50V
2305	5322 122 32531	100pF 5% 50V
2306	4822 124 41525	100µF 20% 25V
2307	4822 124 41525	100µF 20% 25V
2308	4822 122 33496	100nF 10% 63V
2309	4822 122 33496	100nF 10% 63V
2340	4822 122 33496	100nF 10% 63V
2341	4822 122 33496	100nF 10% 63V
2342	4822 122 33496	100nF 10% 63V
2343	4822 122 33496	100nF 10% 63V
2344	4822 122 33496	100nF 10% 63V
2345	4822 122 33496	100nF 10% 63V
2346	4822 122 33496	100nF 10% 63V
2347	4822 122 33809	22nF 20% 50V
2348	4822 122 33809	22nF 20% 50V
2349	4822 122 33809	22nF 20% 50V
2350	4822 122 33809	22nF 20% 50V
2351	4822 124 40272	33µF 20% 16V
2352	4822 124 40272	33µF 20% 16V
2353	4822 124 40272	33µF 20% 16V
2354	4822 124 40272	33µF 20% 16V
2355	4822 124 40272	33µF 20% 16V
2356	4822 121 43866	10nF 5% 50V
2357	4822 121 43866	10nF 5% 50V
2358	4822 122 33177	10nF 20% 50V
2359	4822 122 33177	10nF 20% 50V
2360	4822 124 40435	10µF 20% 50V
2361	4822 124 41576	2,2µF 20% 50V
2370	4822 122 33809	22nF 20% 50V
2371	4822 124 40272	33µF 20% 16V
2372	4822 122 33809	22nF 20% 50V
2373	4822 124 40272	33µF 20% 16V
2374	4822 122 33809	22nF 20% 50V
2375	4822 124 40272	33µF 20% 16V
2376	4822 124 40272	33µF 20% 16V
2377	4822 122 33809	22nF 20% 50V
2378	4822 122 33809	22nF 20% 50V
2379	4822 124 40272	33µF 20% 16V
2380	4822 121 51356	180nF 10% 63V
2381	4822 124 41576	2,2µF 20% 50V
2382	5322 122 32448	10pF 5% 50V
2383	4822 122 32575	220pF 10% 500V
2384	5322 122 32659	33pF 5% 50V
2385	5322 122 32659	33pF 5% 50V
2386	4822 122 33809	22nF 20% 50V
2387	4822 122 33809	22nF 20% 50V
2400	4822 122 33809	22nF 20% 50V
2401	5322 122 32658	22pF 5% 50V
2402	5322 122 32531	100pF 5% 50V
2403	5322 122 32531	100pF 5% 50V
2404	5322 122 32531	100pF 5% 50V
2420	4822 122 33809	22nF 20% 50V
2421	4822 124 40272	33µF 20% 16V
2422	4822 122 33809	22nF 20% 50V
2423	4822 124 40272	33µF 20% 16V
2424	4822 121 43897	1nF 5% 50V
2425	4822 121 51252	470nF 5% 63V
⊣⊢		
2426	4822 121 43996	33nF 5% 63V
2427	4822 122 33809	22nF 20% 50V
2428	4822 124 40272	33µF 20% 16V
2429	4822 126 10326	180pF 5% 50V
2430	4822 126 10326	180pF 5% 50V
2431	5322 122 32531	100pF 5% 50V
2432	4822 124 40435	10µF 20% 50V
2433	4822 122 33496	100nF 10% 63V
2434	4822 122 33496	100nF 10% 63V
2435	4822 122 33496	100nF 10% 63V
2436	4822 122 33496	100nF 10% 63V
2452	4822 124 41527	47µF 25V
2453	4822 122 33809	22nF 20% 50V
2454	4822 122 33809	22nF 20% 50V
2455	4822 124 40433	47µF 20% 25V
2457	5322 122 32531	100pF 5% 50V
2458	4822 124 41576	2,2µF 20% 50V
2459	4822 122 33809	22nF 20% 50V
2460	4822 122 33809	22nF 20% 50V
2461	4822 122 33809	22nF 20% 50V
2462	4822 124 40272	33µF 20% 16V
2480	4822 122 33809	22nF 20% 50V
2481	4822 124 40272	33µF 20% 16V
2482	4822 124 40272	33µF 20% 16V
2483	5322 122 32658	22pF 5% 50V
2484	5322 122 32658	22pF 5% 50V
2485	4822 122 33809	22nF 20% 50V
2486	4822 124 40272	33µF 20% 16V
2487	4822 122 33809	22nF 20% 50V
2488	4822 122 33809	22nF 20% 50V
2489	4822 122 33809	22nF 20% 50V
2490	4822 122 33809	22nF 20% 50V
2491	4822 122 33809	22nF 20% 50V
2492	4822 122 33809	22nF 20% 50V
2493	4822 122 33809	22nF 20% 50V
2494	4822 122 33809	22nF 20% 50V
2495	4822 122 33809	22nF 20% 50V
2498	5322 122 31866	6,8nF 10% 63V
2499	5322 122 31866	6,8nF 10% 63V
2500	5322 122 31866	6,8nF 10% 63V
2501	5322 122 32838	82nF 10% 63V
2502	4822 122 33543	15nF 10% 50V
2503	4822 122 33543	15nF 10% 50V
2504	4822 122 33809	22nF 20% 50V
2505	4822 122 33809	22nF 20% 50V
2540	5322 122 32531	100pF 5% 50V
2750	5322 122 32448	10pF 5% 50V
2751	5322 122 32448	10pF 5% 50V
2752	4822 124 41576	2,2µF 20% 50V
2753	4822 124 41576	2,2µF 20% 50V
2754	4822 124 41577	4,7µF 20% 50V
2755	4822 124 41577	4,7µF 20% 50V
2756	5322 122 32448	10pF 5% 50V
2757	5322 122 32448	10pF 5% 50V
2758	4822 122 33809	22nF 20% 50V
2759	4822 122 33809	22nF 20% 50V
2760	4822 122 33809	22nF 20% 50V
2761	4822 122 33809	22nF 20% 50V
2762	4822 124 40272	33µF 20% 16V
2763	4822 124 40272	33µF 20% 16V
2764	4822 124 40272	33µF 20% 16V
2765	4822 124 40272	33µF 20% 16V
2766	5322 116 80853	560pF 5% 63V
2767	5322 116 80853	560pF 5% 63V
2768	5322 116 80853	560pF 5% 63V
2769	5322 116 80853	560pF 5% 63V
2770	4822 122 32139	12pF 5% 63V
2771	4822 122 32139	12pF 5% 63V

3029	4822 050 22203	22k 1% 0,6W
3300	4822 051 20104	100k 5% 0,1W
3301	4822 051 20104	100k 5% 0,1W
3302	4822 051 20104	100k 5% 0,1W
3303	4822 051 20104	100k 5% 0,1W
3304	4822 050 21002	1k 1% 0,6W
3305	4822 050 21002	1k 1% 0,6W
3306	4822 050 21002	1k 1% 0,6W
3307	4822 050 21002	1k 1% 0,6W
3308	4822 052 10339	33Ω 5% 0,33W
3309	4822 052 10339	33Ω 5% 0,33W
3340	4822 052 10478	4Ω7 5% 0,33W
3341	4822 052 10478	4Ω7 5% 0,33W
3342	4822 052 10478	4Ω7 5% 0,33W
3343	4822 051 20479	47Ω 5% 0,1W
3344	4822 051 20479	47Ω 5% 0,1W
3345	4822 052 10478	4Ω7 5% 0,33W
3346	4822 051 20223	22k 5% 0,1W
3347	4822 051 20223	22k 5% 0,1W
3348	4822 051 20472	4k7 5% 0,1W
3349	4822 052 10478	4Ω7 5% 0,33W
3350	4822 052 10478	4Ω7 5% 0,33W
3351	4822 051 20479	47Ω 5% 0,1W
3352	4822 051 20479	47Ω 5% 0,1W
3354	4822 052 10478	4Ω7 5% 0,33W
3370	4822 052 10478	4Ω7 5% 0,33W
3371	4822 052 10478	4Ω7 5% 0,33W
3372	4822 050 21003	10k 1% 0,6W
3373	4822 050 21003	10k 1% 0,6W
3374	4822 050 21003	10k 1% 0,6W
3377	4822 052 10478	4Ω7 5% 0,33W
3378	4822 052 10108	1Ω 5% 0,33W
3379	4822 051 20391	390Ω 5% 0,1W
3380	4822 051 20121	120Ω 5% 0,1W
3381	4822 050 21003	10k 1% 0,6W
3382	4822 051 20274	270k 5% 0,1W
3383	4822 051 20274	270k 5% 0,1W
3385	4822 051 20101	100Ω 5% 0,1W
3386	4822 051 20101	100Ω 5% 0,1W
3387	4822 052 10478	4Ω7 5% 0,33W
3400	4822 052 10478	4Ω7 5% 0,33W
3401	4822 051 20101	100Ω 5% 0,1W
3402	4822 051 20101	100Ω 5% 0,1W
3403	4822 051 20101	100Ω 5% 0,1W
3404	4822 051 20101	100Ω 5% 0,1W
3420	4822 052 10478	4Ω7 5% 0,33W
3421	4822 051 20103	10k 5% 0,1W
3422	4822 052 10478	4Ω7 5% 0,33W
3423	4822 050 23001	300Ω 1% 0,6W
3424	4822 051 20103	10k 5% 0,1W
3425	4822 051 20104	100k 5% 0,1W
3426	4822 051 20104	100k 5% 0,1W
3427	4822 051 20331	330Ω 5% 0,1W
3428	4822 051 20274	270k 5% 0,1W
3429	4822 051 20152	1k5 5% 0,1W
3430	4822 051 20682	6k8 5% 0,1W
3431	4822 051 20272	2k7 5% 0,1W
3432	4822 051 20682	6k8 5% 0,1W
3433	4822 051 20479	47Ω 5% 0,1W
3434	4822 051 20273	47k 5% 0,1W
3435	4822 051 20103	10k 5% 0,1W
3436	4822 051 20759	75Ω 5% 0,1W
3437	4822 050 21002	1k 1% 0,6W
3438	4822 051 20105	1M 5% 0,1W
3439	4822 051 20223	22k 5% 0,1W

3440	4822 051 20473	47k 5% 0,1W
3441	4822 051 20103	10k 5% 0,1W
3442	4822 051 20223	22k 5% 0,1W
3443	4822 052 10478	4Ω7 5% 0,33W
3444	4822 051 20223	22k 5% 0,1W
3445	4822 051 20223	22k 5% 0,1W
3446	4822 051 20473	47k 5% 0,1W
3447	4822 051 20473	47k 5% 0,1W
3448	4822 051 20103	10k 5% 0,1W
3449	4822 051 20101	100Ω 5% 0,1W
3450	4822 050 22403	24k 1% 0,6W
3451	4822 050 24302	4k3 1% 0,6W
3452	4822 050 21304	130k 1% 0,6W
3453	4822 052 10339	33Ω 5% 0,33W
3454	4822 052 10339	33Ω 5% 0,33W
3455	4822 050 22403	24k 1% 0,6W
3456	4822 050 24302	4k3 1% 0,6W
3457	4822 050 21304	130k 1% 0,6W
3458	4822 050 21002	1k 1% 0,6W
3459	4822 051 20822	8k2 5% 0,1W
3460	4822 051 20105	1M 5% 0,1W
3461	4822 051 20222	2k2 5% 0,1W
3462	4822 052 10108	1Ω 5% 0,33W
3463	4822 051 20222	2k2 5% 0,1W
3464	4822 051 20103	10k 5% 0,1W
3480	4822 052 10108	1Ω 5% 0,33W
3481	4822 051 20824	820k 5% 0,1W
3482	4822 051 20103	10k 5% 0,1W
3484	4822 050 21002	1k 1% 0,6W
3485	4822 051 20223	22k 5% 0,1W
3486	4822 050 22203	22k 1% 0,6W
3487	4822 050 22203	22k 1% 0,6W
3488	4822 050 22203	22k 1% 0,6W
3489	4822 052 10478	4Ω7 5% 0,33W
3490	4822 051 20223	22k 5% 0,1W
3491	4822 051 20101	100Ω 5% 0,1W
3492	4822 051 20101	100Ω 5% 0,1W
3493	4822 051 10102	1k 2% 0,25W
3494	4822 051 10101	100Ω 2% 0,25W
3495	4822 050 22203	22k 1% 0,6W
3496	4822 050 21002	1k 1% 0,6W
3497	4822 050 22203	22k 1% 0,6W
3498	4822 051 10102	1k 2% 0,25W
3499	4822 051 20223	22k 5% 0,1W
3500	4822 051 20223	22k 5% 0,1W
3501	4822 050 22203	22k 1% 0,6W
3502	4822 050 22203	22k 1% 0,6W
3503	4822 050 21002	1k 1% 0,6W
3504	4822 051 20103	10k 5% 0,1W
3505	4822 051 20223	22k 5% 0,1W
3508	4822 050 22203	22k 1% 0,6W
3509	4822 050 22203	22k 1% 0,6W
3510	4822 050 22203	22k 1% 0,6W
3511	4822 050 22203	22k 1% 0,6W
3512	4822 050 22203	22k 1% 0,6W
3513	4822 050 21002	1k 1% 0,6W
3514	4822 050 21002	1k 1% 0,6W
3515	4822 050 21002	1k 1% 0,6W
3516	4822 051 20472	4k7 5% 0,1W
3517	4822 051 20153	15k 5% 0,1W
3518	4822 051 20272	2k7 5% 0,1W
3519	4822 051 20473	47k 5% 0,1W
3520	4822 050 21002	1k 1% 0,6W
3521	4822 051 10102	1k 2% 0,25W
3522	4822 050 23483	34k8 1% 0,6W

3523	4822 050 23483	34k8 1% 0,6W
3524	4822 050 21783	17k8 1% 0,6W
3525	4822 050 28662	8k66 1% 0,6W
3526	4822 050 21003	10k 1% 0,6W
3527	4822 050 21003	10k 1% 0,6W
3528	4822 050 21002	1k 1% 0,6W
3529	4822 050 21003	10k 1% 0,6W
3530	4822 050 21002	1k 1% 0,6W
3531	4822 050 21003	10k 1% 0,6W
3532	4822 050 21002	1k 1% 0,6W
3533	4822 050 21003	10k 1% 0,6W
3534	4822 050 21002	1k 1% 0,6W
3535	4822 050 21003	10k 1% 0,6W
3536	4822 051 20103	10k 5% 0,1W
3537	4822 051 20103	10k 5% 0,1W
3538	4822 051 20824	820k 5% 0,1W
3539	4822 051 20103	10k 5% 0,1W
3540	4822 051 20223	22k 5% 0,1W
3541	4822 051 20473	47k 5% 0,1W
3542	4822 051 20183	18k 5% 0,1W
3543	4822 051 20103	10k 5% 0,1W
3544	4822 051 20103	10k 5% 0,1W
3545	4822 051 20391	390Ω 5% 0,1W
3550	4822 051 10101	100Ω 2% 0,25W
3551	4822 051 10101	100Ω 2% 0,25W
3552	4822 052 10478	4Ω7 5% 0,33W
3553	4822 051 20103	10k 5% 0,1W
3554	4822 050 22203	22k 1% 0,6W
3555	4822 050 22203	22k 1% 0,6W
3556	4822 050 22203	22k 1% 0,6W
3557	4822 050 22203	22k 1% 0,6W
3750	4822 050 21004	100k 1% 0,6W
3751	4822 050 21004	100k 1% 0,6W
3752	4822 050 21004	100k 1% 0,6W
3753	4822 050 21004	100k 1% 0,6W
3754	4822 050 21004	100k 1% 0,6W
3755	4822 050 21004	100k 1% 0,6W
3756	4822 050 22004	100k 1% 0,6W
3757	4822 050 22004	100k 1% 0,6W
3758	4822 050 22004	100k 1% 0,6W
3759	4822 050 22004	100k 1% 0,6W
3760	4822 051 20103	10k 5% 0,1W
3761	4822 051 20103	10k 5% 0,1W
3762	4822 051 20394	390k 5% 0,1W
3763	4822 051 20394	390k 5% 0,1W
3764	4822 051 20472	4k7 5% 0,1W
3765	4822 051 20472	4k7 5% 0,1W
3766	4822 051 20472	4k7 5% 0,1W
3767	4822 051 20472	4k7 5% 0,1W
3768	4822 051 20183	18k 5% 0,1W
3769	4822 051 20183	18k 5% 0,1W
3770	4822 051 20183	18k 5% 0,1W
3771	4822 051 20183	18k 5% 0,1W
3772	4822 052 10339	33Ω 5% 0,33W
3773	4822 052 10339	33Ω 5% 0,33W
3774	4822 052 10339	33Ω 5% 0,33W
3775	4822 052 10339	33Ω 5% 0,33W
4400	4822 051 10008	Chip jumper
4401	4822 051 10008	Chip jumper
4481	4822 051 10008	Chip jumper
4482	4822 051 10008	Chip jumper
4484	4822 051 10008	Chip jumper

5340	4822 157 51235	COIL 4,7µH 10%

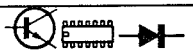

6420	4822 130 30862	BZX79-C9V1
6482	4822 130 31983	BAT85
6483	4822 130 31983	BAT85
6540	4822 130 30621	1N4148
6541	4822 130 30621	1N4148
6750	4822 130 30621	1N4148
6751	4822 130 30621	1N4148
6752	4822 130 30621	1N4148
6753	4822 130 30621	1N4148
6754	4822 130 30621	1N4148
6755	4822 130 30621	1N4148
6756	4822 130 30621	1N4148
6757	4822 130 30621	1N4148
6758	4822 130 30621	1N4148
6759	4822 130 30621	1N4148
6760	4822 130 34174	BZX79-C4V7
6761	4822 130 34174	BZX79-C4V7
7300	5322 209 86234	NE5532N
7340	4822 209 30728	AK5326
7341	4822 209 30736	MC74HC163D
7342	4822 209 30736	MC74HC163D
7343	4822 209 30739	MC74HC04AD
7344	4822 209 30721	MC74HC74AD
7345	4822 130 42696	BC818-25
7346	4822 130 61207	BC848
7347	5322 209 11222	MC7905CT
7370	4822 209 30716	CDCE
7371	4822 209 63925	FCB61C65L-70T
7372	4822 209 30726	MC74HC4046AD
7373	4822 209 83163	LM833N
7374	4822 209 30735	MC74HC175D
7375	4822 209 30719	MC74HC00AD
7400	4822 209 30703	MC74HC157AD
7420	4822 209 30718	M51581FP
7421	4822 130 31129	BB212
7422	5322 209 82941	LM358D
7423	4822 130 61207	BC848
7424	5322 130 42012	BC858
7425	4822 209 30734	MC74HC4053N
7426	4822 130 61207	BC848
7427	4822 130 61207	BC848
7450	4822 209 30717	WPC
7451	4822 209 30732	LM319D
7452	4822 209 83163	LM833N
7480	4822 209 30715	MC68HC11F1
7481	4822 209 30729	AM27C512-150PC
7482	4822 209 30727	X28C64P-20
7483	4822 209 30722	MC74HC139AD
7484	4822 209 30719	MC74HC00AD
7485	4822 209 30741	SAD1009T/03
7486	4822 209 30724	MC74HC374ADW
7487	4822 209 30724	MC74HC374ADW
7488	4822 209 30723	MC74HC373ADW
7490	5322 130 42012	BC858
7491	4822 209 70941	MC34084P
7492	5322 209 81331	MC7805ACT
7542	4822 130 44197	BC558B
7543	4822 130 61207	BC848
7750	4822 209 70941	MC34084P
7751	4822 209 83163	LM833N
7752	4822 130 61207	BC848
7753	4822 130 61207	BC848
7754	4822 130 61207	BC848
7755	4822 130 61207	BC848

DECODER PANEL

Miscellaneous

1140	4822 276 12339	SWITCH,PUSHBUT.
1170	4822 218 21019	REMOTE CONTROL PLT102

HF transformer

1180	4822 148 80281	HF TRANSFORMER

2090	4822 122 33175	2,2nF 20% 50V
2091	4822 124 40272	33µF 20% 16V
2092	4822 122 33809	22nF 20% 50V
2093	4822 121 51252	470nF 5% 63V
2094	4822 124 41576	2,2µF 20% 50V
2095	4822 124 40272	33µF 20% 16V
2096	4822 122 33809	22nF 20% 50V
2097	5322 122 32452	47pF 5% 50V
2098	4822 122 33809	22nF 20% 50V
2099	5322 122 32531	100pF 5% 50V
2140	4822 122 33809	22nF 20% 50V
2141	5322 122 32659	33pF 5% 50V
2142	5322 122 32659	33pF 5% 50V
2160	4822 122 33172	390pF 5% 50V
2161	4822 122 33172	390pF 5% 50V
2162	4822 122 33172	390pF 5% 50V
2163	4822 122 33172	390pF 5% 50V
2170	4822 122 33809	22nF 20% 50V
2171	4822 124 40272	33µF 20% 16V
2180	4822 122 33105	56nF 10% 63V
2181	4822 122 33105	56nF 10% 63V
2182	4822 122 33496	100nF 10% 63V
2190	4822 124 40272	33µF 20% 16V
2191	4822 122 33496	100nF 10% 63V
2192	5322 122 32659	33pF 5% 50V
2196	5322 122 32659	33pF 5% 50V
2230	4822 122 10166	22nF 30% 16V
2231	5322 122 32531	100pF 5% 50V
2232	5322 122 32531	100pF 5% 50V
2250	4822 122 33809	22nF 20% 50V
2260	4822 122 33809	22nF 20% 50V
2261	4822 122 33809	22nF 20% 50V
2262	4822 122 33809	22nF 20% 50V
2263	4822 122 33809	22nF 20% 50V
2264	4822 124 41525	100µF 20% 25V
2265	4822 124 41525	100µF 20% 25V
2266	4822 124 41525	100µF 20% 25V
2267	4822 124 41525	100µF 20% 25V
2268	4822 124 22339	100µF 20% 16V Bipolar
2269	4822 124 22339	100µF 20% 16V Bipolar
2280	4822 122 10166	22nF 30% 16V

3090	4822 051 20222	2k2 5% 0,1W
3091	4822 051 20223	22k 5% 0,1W
3092	4822 051 20223	22k 5% 0,1W
3093	4822 051 20223	22k 5% 0,1W
3094	4822 052 10108	1Ω 5% 0,33W
3095	4822 051 20103	10k 5% 0,1W
3097	4822 051 20759	75Ω 5% 0,1W
3098	4822 051 20392	3k9 5% 0,1W
3099	4822 051 20912	9k1 5% 0,1W
3100	4822 051 20162	1k6 5% 0,1W
3101	4822 052 10478	4Ω7 5% 0,33W
3102	4822 051 20223	22k 5% 0,1W
3103	4822 051 20223	22k 5% 0,1W
3104	4822 051 20223	22k 5% 0,1W
3105	4822 051 20223	22k 5% 0,1W
3106	4822 051 10102	1k 2% 0,25W
3108	4822 051 20101	100Ω 5% 0,1W
3129	4822 051 20223	22k 5% 0,1W
3130	4822 051 20223	22k 5% 0,1W
3140	4822 052 10478	4Ω7 5% 0,33W
3141	4822 051 20223	22k 5% 0,1W
3142	4822 051 20472	4k7 5% 0,1W
3143	4822 051 20101	100Ω 5% 0,1W
3144	4822 051 20101	100Ω 5% 0,1W
3159	4822 051 20563	56k 5% 0,1W
3160	4822 051 20101	100Ω 5% 0,1W
3161	4822 051 20101	100Ω 5% 0,1W
3162	4822 051 20101	100Ω 5% 0,1W
3163	4822 051 20101	100Ω 5% 0,1W
3164	4822 051 20122	1k2 5% 0,1W
3165	4822 051 20122	1k2 5% 0,1W
3166	4822 051 20122	1k2 5% 0,1W
3167	4822 051 20122	1k2 5% 0,1W
3168	4822 051 20101	100Ω 5% 0,1W
3169	4822 051 20272	2k7 5% 0,1W
3170	4822 052 10478	4Ω7 5% 0,33W
3171	4822 051 20822	8k2 5% 0,1W
3180	4822 051 20561	560Ω 5% 0,1W
3181	4822 051 20621	620Ω 5% 0,1W
3190	4822 052 10108	1Ω 5% 0,33W
3191	4822 051 20101	100Ω 5% 0,1W
3195	4822 051 20101	100Ω 5% 0,1W
3196	4822 051 20103	10k 5% 0,1W
3197	4822 051 20223	22k 5% 0,1W
3198	4822 051 20472	4k7 5% 0,1W
3199	4822 051 20103	10k 5% 0,1W
3230	4822 051 10101	100Ω 2% 0,25W
3231	4822 052 10478	4Ω7 5% 0,33W
3232	4822 051 20223	22k 5% 0,1W
3233	4822 051 20223	22k 5% 0,1W
3234	4822 051 20223	22k 5% 0,1W
3235	4822 051 20101	100Ω 5% 0,1W
3236	4822 051 20101	100Ω 5% 0,1W
3237	4822 051 20223	22k 5% 0,1W
3250	4822 052 10478	4Ω7 5% 0,33W
3251	4822 051 10102	1k 2% 0,25W
3260	4822 050 21203	12k 1% 0,6W
3261	4822 050 21203	12k 1% 0,6W
3262	4822 050 21003	12k 1% 0,6W
3263	4822 050 21003	12k 1% 0,6W
3272	4822 052 10339	33Ω 5% 0,33W
3273	4822 052 10339	33Ω 5% 0,33W
3274	4822 052 10339	33Ω 5% 0,33W
3275	4822 052 10339	33Ω 5% 0,33W
3276	4822 051 20103	10k 5% 0,1W
3277	4822 051 20103	10k 5% 0,1W
3280	4822 051 20223	22k 5% 0,1W
3281	4822 052 10478	4Ω7 5% 0,33W
3282	4822 051 20223	22k 5% 0,1W
3801	4822 051 10008	Chip jumper
3802	4822 051 10008	Chip jumper
3803	4822 051 10008	Chip jumper
3804	4822 051 10008	Chip jumper
3805	4822 051 10008	Chip jumper
3806	4822 051 10008	Chip jumper
3807	4822 051 10008	Chip jumper
3808	4822 051 10008	Chip jumper
3809	4822 051 10008	Chip jumper
3810	4822 051 10008	Chip jumper
3812	4822 051 10008	Chip jumper

3813	4822 051 10008	Chip jumper
3814	4822 051 10008	Chip jumper
3815	4822 051 10008	Chip jumper
3816	4822 051 10008	Chip jumper
3817	4822 051 10008	Chip jumper
3818	4822 051 10008	Chip jumper
3819	4822 051 10008	Chip jumper
3820	4822 051 10008	Chip jumper
3821	4822 051 10008	Chip jumper
3822	4822 051 10008	Chip jumper
3823	4822 051 10008	Chip jumper
3825	4822 051 10008	Chip jumper
3828	4822 051 10008	Chip jumper
3845	4822 051 10008	Chip jumper
4160	4822 051 10008	Chip jumper
4190	4822 051 10008	Chip jumper
4191	4822 051 10008	Chip jumper
4192	4822 051 10008	Chip jumper
4193	4822 051 10008	Chip jumper
4230	4822 051 10008	Chip jumper
4260	4822 051 10008	Chip jumper
4261	4822 051 10008	Chip jumper
4262	4822 051 10008	Chip jumper
4263	4822 051 10008	Chip jumper
4264	4822 051 10008	Chip jumper

5160	4822 157 60363	COIL

6141	4822 130 42696	BC818-25
6160	4822 130 31981	BZX79-C3V9
6161	4822 130 30621	1N4148
6162	4822 130 30621	1N4148
7090	4822 209 61759	SAA7310GP/H5
7091	4822 209 70422	MN4264-15
7092	4822 130 42131	BF550
7140	4822 209 30719	MC74HC00AD
7160	4822 130 42696	BC818-25
7161	4822 130 42696	BC818-25
7162	4822 130 42696	BC818-25
7163	4822 130 42696	BC818-25
7164	5322 130 42012	BC858
7190	4822 209 72545	SAA7220P/B
7191	4822 130 61207	BC848
7192	4822 130 42696	BC818-25
7230	4822 209 30703	MC74HC157AD
7250	4822 209 30721	MC74HC74AD
7260	5322 209 86234	NE5532N
7261	5322 209 86234	NE5532N
7280	4822 209 30719	MC74HC00AD

LEVEL AND BALANCE PANEL

2556	4822 124 22339	100µF 20% 16V Bipolar
2557	4822 124 22339	100µF 20% 16V Bipolar
2558	4822 124 22339	100µF 20% 16V Bipolar
2559	4822 124 22339	100µF 20% 16V Bipolar
2560	4822 124 40433	47µF 20% 25V
2561	4822 124 40433	47µF 20% 25V
2562	4822 122 10166	22nF 30% 16V
2563	4822 122 10166	22nF 30% 16V
2564	4822 122 10166	22nF 30% 16V
2565	4822 122 10166	22nF 30% 16V
2566	4822 124 40433	47µF 20% 25V
2567	4822 124 40433	47µF 20% 25V

3550	4822 102 50056	3x10k 20% Potm LEVEL
3551		2x10k Potm BALANCE
3552	4822 050 22003	20k 1% 0,6W
3553	4822 050 22003	20k 1% 0,6W
3554	4822 050 28202	8k2 1% 0,6W
3555	4822 050 28202	8k2 1% 0,6W
3556	4822 050 24701	470Ω 1% 0,6W
3557	4822 050 24701	470Ω 1% 0,6W
3558	4822 050 24701	470Ω 1% 0,6W
3559	4822 050 24701	470Ω 1% 0,6W

6550	4822 130 34167	BZX79-C6V2
6551	4822 130 34167	BZX79-C6V2
6552	4822 130 34167	BZX79-C6V2
6553	4822 130 34167	BZX79-C6V2
7550	5322 209 86234	NE5532N
7551	5322 209 86234	NE5532N

CONTROL AND DISPLAY PANEL

Miscellaneous

	4822 256 91832	FTD HOLDER
	4822 255 41241	LED SOCKET
	4822 255 41241	LED SOCKET
	4822 255 41239	LED SOCKET
1802	4822 214 51772	RECEIVER GP1U521X
1804	4822 242 73654	RESONATOR
1805	4822 130 91052	DISPLAY BG-982Gk
1810	4822 276 13112	SWITCH,PUSHBUT.
1811	4822 276 13112	SWITCH,PUSHBUT.
1812	4822 276 13112	SWITCH,PUSHBUT.
1813	4822 276 13112	SWITCH,PUSHBUT.
1814	4822 276 13112	SWITCH,PUSHBUT.
1815	4822 276 13112	SWITCH,PUSHBUT.
1816	4822 276 13112	SWITCH,PUSHBUT.
1817	4822 276 13112	SWITCH,PUSHBUT.
1818	4822 276 13112	SWITCH,PUSHBUT.
1819	4822 276 13112	SWITCH,PUSHBUT.
1820	4822 276 13112	SWITCH,PUSHBUT.
1821	4822 276 13112	SWITCH,PUSHBUT.
1822	4822 276 13112	SWITCH,PUSHBUT.
1823	4822 276 13112	SWITCH,PUSHBUT.
1824	4822 276 13112	SWITCH,PUSHBUT.
1825	4822 276 13112	SWITCH,PUSHBUT.
1826	4822 276 13112	SWITCH,PUSHBUT.
1827	4822 276 13112	SWITCH,PUSHBUT.
1828	4822 276 13112	SWITCH,PUSHBUT.
1829	4822 276 13104	SWITCH,PUSHBUT.
1830	4822 276 13112	SWITCH,PUSHBUT.
1831	4822 276 13112	SWITCH,PUSHBUT.
1832	4822 276 13112	SWITCH,PUSHBUT.
1833	4822 276 13112	SWITCH,PUSHBUT.
1834	4822 276 13112	SWITCH,PUSHBUT.
1835	4822 276 13112	SWITCH,PUSHBUT.
1836	4822 276 13112	SWITCH,PUSHBUT.
1837	4822 276 13112	SWITCH,PUSHBUT.
1838	4822 276 13104	SWITCH,PUSHBUT.
1839	4822 276 13104	SWITCH,PUSHBUT.
1840	4822 276 13112	SWITCH,PUSHBUT.
1841	4822 276 13112	SWITCH,PUSHBUT.
1842	4822 276 13112	SWITCH,PUSHBUT.
1843	4822 276 13112	SWITCH,PUSHBUT.
1844	4822 276 13112	SWITCH,PUSHBUT.
1845	4822 276 13112	SWITCH,PUSHBUT.
1846	4822 276 13112	SWITCH,PUSHBUT.

2805	4822 122 10166	22nF 30% 16V
2806	4822 124 22031	4µ7 20% 63V

3800	4822 050 22203	22k 1% 0,6W
3801	4822 051 10101	100Ω 2% 0,25W
3802	4822 050 22203	22k 1% 0,6W
3803	4822 050 22203	22k 1% 0,6W
3804	4822 050 22203	22k 1% 0,6W
3805	4822 050 22203	22k 1% 0,6W
3806	4822 116 52217	270Ω 5% 0,5W
3807	4822 116 52217	270Ω 5% 0,5W
3808	4822 116 52217	270Ω 5% 0,5W
3809	4822 116 52217	270Ω 5% 0,5W
3810	4822 050 21002	1k 1% 0,6W
3811	4822 051 10101	100Ω 2% 0,25W
3812	4822 051 10101	100Ω 2% 0,25W
3816	5322 111 90473	10k 2% Res.Network
3817	5322 111 90473	10k 2% Res.Network
3818	4822 050 21002	1k 1% 0,6W
3820	4822 050 22204	220k 1% 0,6W
3821	4822 050 22203	22k 1% 0,6W
3822	4822 050 22203	22k 1% 0,6W
3823	4822 050 21002	1k 1% 0,6W
3824	4822 050 22203	22k 1% 0,6W
3825	4822 050 22203	22k 1% 0,6W
3826	4822 050 22203	22k 1% 0,6W

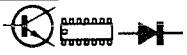

6800	4822 130 30621	1N4148
6801	4822 130 30621	1N4148
6802	4822 130 30621	1N4148
6803	4822 130 30621	1N4148
6804	4822 130 30621	1N4148
6805	4822 130 30621	1N4148
6806	4822 130 30621	1N4148
6807	4822 130 30621	1N4148
6808	4822 130 30621	1N4148
6809	4822 130 30621	1N4148
6810	4822 130 80849	TLHR4499
6811	4822 130 80849	TLHR4499
6812	4822 130 80849	TLHR4499
6813	4822 130 80849	TLHR4499
6102	4822 130 80848	TLGH4999
6501	4822 130 80848	TLGH4999
6816	4822 130 80849	TLHR4499
6817	4822 130 80849	TLHR4499
7800	4822 209 61191	TMP47C670N/1364
7801	4822 130 40938	BC548
7802	4822 130 40938	BC548
7803	4822 130 44197	BC558B
7804	4822 130 40938	BC548
7805	4822 209 60886	UDN-2580A
7806	4822 209 60886	UDN-2580A

2001	4822 124 42355	10µF 20% 50V
2002	4822 124 42355	10µF 20% 50V
2003	4822 121 51093	6,8nF 10% 63V
2004	4822 121 51093	6,8nF 10% 63V
2005	4822 126 10324	33pF 63V
2006	4822 126 10324	33pF 63V
2007	5322 121 42386	100nF 5% 50V
2008	5322 121 42386	100nF 5% 50V
2009	5322 121 42386	100nF 5% 50V
2010	5322 121 42386	100nF 5% 50V
2011	5322 121 42386	100nF 5% 50V
2012	5322 121 42386	100nF 5% 50V
2013	4822 124 42355	10µF 20% 50V
2014	4822 124 42355	10µF 20% 50V
2015	4822 124 42355	10µF 20% 50V
2016	4822 124 42355	10µF 20% 50V
2201	4822 124 42354	100µF 20% 16
2202	4822 124 42354	100µF 20% 16
2203	4822 124 42354	100µF 20% 16
2204	4822 124 42354	100µF 20% 16
2205	4822 122 32083	8,2pF 5% 63V
2206	4822 122 32083	8,2pF 5% 63V
2207	4822 122 32083	8,2pF 5% 63V
2208	4822 122 32083	8,2pF 5% 63V
2209	4822 122 31765	100pF 5% 63V
2210	4822 122 31765	100pF 5% 63V
2211	4822 122 31765	100pF 5% 63V
2212	4822 122 31765	100pF 5% 63V
2213	4822 124 42354	100µF 20% 16
2214	4822 124 42354	100µF 20% 16
2331	4822 124 42355	10µF 20% 50V
2332	4822 124 42355	10µF 20% 50V
2333	4822 124 42355	10µF 20% 50V
2334	4822 124 42355	10µF 20% 50V
2335	4822 122 31746	1nF 5% 63V
2336	4822 122 31746	1nF 5% 63V
2337	4822 124 42354	100µF 20% 16
2338	4822 124 42354	100µF 20% 16
2339	4822 121 70052	15nF 5% 63V
2340	4822 121 70052	15nF 5% 63V
2401	4822 124 42355	10µF 20% 50V
2402	4822 124 42355	10µF 20% 50V
2403	4822 124 42355	10µF 20% 50V
2404	4822 124 42355	10µF 20% 50V
2405	4822 124 42355	10µF 20% 50V
2406	4822 124 42355	10µF 20% 50V
2407	4822 124 42355	10µF 20% 50V
2408	4822 124 42355	10µF 20% 50V
2421	4822 124 42355	10µF 20% 50V
2422	4822 124 42355	10µF 20% 50V
2423	4822 124 42355	10µF 20% 50V
2424	4822 124 42355	10µF 20% 50V
2431	4822 124 42355	10µF 20% 50V
2432	4822 124 42355	10µF 20% 50V
2433	4822 124 42355	10µF 20% 50V
2434	4822 124 42355	10µF 20% 50V
2435	4822 124 42355	10µF 20% 50V
2436	4822 124 42355	10µF 20% 50V
2437	4822 124 42355	10µF 20% 50V
2438	4822 124 42355	10µF 20% 50V
2440	4822 124 42355	10µF 20% 50V
2441	4822 124 42355	10µF 20% 50V
2501	4822 124 42355	10µF 20% 50V

3001	4822 051 10103	10k 2% 0,25W
3002	4822 051 10103	10k 2% 0,25W
3003	5322 116 80427	1k 1% 0,125W
3004	5322 116 80427	1k 1% 0,125W
3005	4822 051 10109	10Ω 2% 0,25W
3006	4822 051 10109	10Ω 2% 0,25W
3013	4822 051 53302	3k3 1% 0,125W
3014	4822 051 53302	3k3 1% 0,125W
3015	4822 051 55101	510Ω 1% 0,125W
3016	4822 051 55101	510Ω 1% 0,125W
3017	4822 051 51203	12k 1% 0,125W
3018	4822 051 51203	12k 1% 0,125W
3019	4822 051 58203	82k 1% 0,125W
3020	4822 051 58203	82k 1% 0,125W
3021	4822 051 54702	4k7 1% 0,125W
3022	4822 051 54702	4k7 1% 0,125W
3023	4822 051 54703	47k 1% 0,125W
3024	4822 051 54703	47k 1% 0,125W
3027	4822 051 54701	470Ω 1% 0,125W
3028	4822 051 54701	470Ω 1% 0,125W
3033	4822 051 51802	1k8 1% 0,125W
3034	4822 051 51802	1k8 1% 0,125W
3035	4822 051 54703	47k 1% 0,125W
3036	4822 051 54703	47k 1% 0,125W
3037	4822 051 10829	82Ω 2% 0,25W
3201	4822 051 56803	68k 1% 0,125W
3202	4822 051 56803	68k 1% 0,125W
3203	4822 051 54703	47k 1% 0,125W
3204	4822 051 54703	47k 1% 0,125W
3205	4822 051 54703	47k 1% 0,125W
3206	4822 051 54703	47k 1% 0,125W
3207	4822 051 51503	15k 1% 0,125W
3208	4822 051 51503	15k 1% 0,125W
3209	4822 051 51503	15k 1% 0,125W
3210	4822 051 51503	15k 1% 0,125W
3211	4822 051 54702	4k7 1% 0,125W
3212	4822 051 54702	4k7 1% 0,125W
3213	4822 051 54702	4k7 1% 0,125W
3214	4822 051 54702	4k7 1% 0,125W
3215	4822 051 54702	4k7 1% 0,125W
3216	4822 051 54702	4k7 1% 0,125W
3217	4822 051 54702	4k7 1% 0,125W
3218	4822 051 54702	4k7 1% 0,125W
3219	4822 051 54703	47k 1% 0,125W
3220	4822 051 54703	47k 1% 0,125W
3331	4822 051 55602	5k6 1% 0,125W
3332	4822 051 55602	5k6 1% 0,125W
3333	4822 051 55602	5k6 1% 0,125W
3334	4822 051 55602	5k6 1% 0,125W
3335	5322 116 80427	1k 1% 0,125W
3336	5322 116 80427	1k 1% 0,125W
3337	5322 116 80445	4k7 1% 0,125W
3338	5322 116 80445	4k7 1% 0,125W
3339	4822 051 55602	5k6 1% 0,125W
3340	4822 051 55602	5k6 1% 0,125W
3341	4822 051 56803	68k 1% 0,125W
3342	4822 051 56803	68k 1% 0,125W
3343	4822 051 51503	15k 1% 0,125W
3344	4822 051 51503	15k 1% 0,125W
3345	5322 116 80445	4k7 1% 0,125W
3346	5322 116 80445	4k7 1% 0,125W
3347	4822 100 10875	2K2 20% Trimpot
3348	4822 100 10875	2K2 20% Trimpot
3349	4822 051 55101	510Ω 1% 0,125W
3350	4822 051 55101	510Ω 1% 0,125W

3351	4822 051 55101	510Ω 1% 0,125W
3352	4822 051 55101	510Ω 1% 0,125W
3401	4822 116 81207	47Ω 1% 0,4W
3402	4822 116 81207	47Ω 1% 0,4W
3403	4822 116 81207	47Ω 1% 0,4W
3404	4822 116 81207	47Ω 1% 0,4W
3405	4822 116 81207	47Ω 1% 0,4W
3406	4822 116 81207	47Ω 1% 0,4W
3407	4822 116 81207	47Ω 1% 0,4W
3408	4822 116 81207	47Ω 1% 0,4W
3409	4822 116 81207	47Ω 1% 0,4W
3422	4822 116 81207	47Ω 1% 0,4W
3423	4822 116 81207	47Ω 1% 0,4W
3424	4822 116 81207	47Ω 1% 0,4W
3431	4822 116 81207	47Ω 1% 0,4W
3432	4822 116 81207	47Ω 1% 0,4W
3433	4822 116 81207	47Ω 1% 0,4W
3434	4822 116 81207	47Ω 1% 0,4W
3435	4822 116 81207	47Ω 1% 0,4W
3436	4822 116 81207	47Ω 1% 0,4W
3437	4822 116 81207	47Ω 1% 0,4W
3438	4822 116 81207	47Ω 1% 0,4W
3501	5322 116 80426	100Ω 1% 0,125W
3502	4822 116 81198	15k 1% 0,125W
3503	5322 116 80429	100k 1% 0,125W
3504	4822 051 10274	270k 2% 0,25W
3505	5322 116 80446	47k 1% 0,125W
3506	5322 116 80438	330Ω 1% 0,125W

5000	4822 280 20495	REEDRELAIS LM44E
5001	4822 280 20495	REEDRELAIS LM44E
5301	4822 148 81219	TRANSFORMER TO 1351 4010
5302	4822 148 81219	TRANSFORMER TO 1351 4010
5501	4822 280 20495	REEDRELAIS LM44E

6005	4822 130 30621	1N4148
6006	4822 130 30621	1N4148
6501	4822 130 30621	1N4148
6502	4822 130 30621	1N4148
6503	4822 130 30621	1N4148
7005	4822 209 63706	LM833M
7006	4822 209 63706	LM833M
7009	4822 209 63706	LM833M
7010	4822 209 63706	LM833M
7201	4822 209 63706	LM833M
7202	4822 209 63706	LM833M
7331	4822 209 30803	NE5532 SO
7332	4822 209 30803	NE5532 SO
7501	4822 209 81397	TL431 CLP

HEADPHONE PANEL

2580	5322 124 21762	100µF 20% 10V
2581	5322 124 21762	100µF 20% 10V
2582	5322 124 21711	100µF 20% 25V
2583	5322 124 21711	100µF 20% 25V

3580	4822 051 10101	100Ω 2% 0,25W
3581	4822 051 10101	100Ω 2% 0,25W
3582	4822 102 10398	10k 20% LOG
3584	4822 050 21203	12k 1% 0,6W
3585	4822 050 21203	12k 1% 0,6W
3586	4822 116 52264	27k 5% 0,5W
3587	4822 116 52264	27k 5% 0,5W
3588	4822 052 10109	10Ω 5% 0,33W
3589	4822 052 10109	10Ω 5% 0,33W
3590	4822 051 10122	1k2 2% 0,25W
3591	4822 051 10122	1k2 2% 0,25W
3592	4822 050 21201	120Ω 1% 0,6W
3593	4822 050 21201	120Ω 1% 0,6W

7580	4822 130 40958	BC338-25
7581	4822 130 40958	BC338-25
7582	4822 209 82362	NJM4556D

Miscellaneous

1502	4822 276 11309	SWITCH,PUSHBUT. SDDL
2000	4822 126 10454	3,3nF 20% 400V
5001	4822 146 31048	TRANSFORMER UNIT

C 1	4822 124 41184	470µF 20% 50V
C 2	5322 124 22614	1000µF 20% 50V
C 3	4822 121 41856	22nF 5% 250V
C 4	4822 124 40207	100µF 20% 25V
C 5	4822 121 41856	22nF 5% 250V
C 6	4822 124 40207	100µF 20% 25V
C 7	4822 121 41856	22nF 5% 250V
C 8	4822 124 40207	100µF 20% 25V
C 9	4822 121 41856	22nF 5% 250V
C 10	4822 124 40207	100µF 20% 25V
C 11	4822 121 41856	22nF 5% 250V
C 12	4822 124 40207	100µF 20% 25V
C 13	4822 121 41856	22nF 5% 250V
C 14	4822 124 40207	100µF 20% 25V
C 15	4822 121 41856	22nF 5% 250V
C 16	4822 124 40207	100µF 20% 25V
C 17	4822 121 41856	22nF 5% 250V
C 18	5322 124 22229	1000µF 20% 35V
C 19	5322 121 42386	100nF 5% 63V
C 20	4822 124 80045	4700µF 20% 50V
C 21	4822 124 80045	4700µF 20% 50V
C 22	4822 124 80045	4700µF 20% 50V
C 23	4822 124 40255	100µF 20% 63V
C 24	4822 121 51252	0,47µF 5% 63V
C 25	4822 124 40244	2,2µF 20% 63V
C 26	5322 122 32818	2,2nF 10% 100V
C 27	5322 121 42489	33nF 5% 250V
C 28	5322 124 22614	1000µF 20% 50V
C 29	4822 122 32121	390pF 2% 100V
C 30	5322 121 42386	100nF 5% 63V
C 31	4822 124 41751	47µF 20% 50V
C 32	4822 124 80045	4700µF 20% 50V
C 33	4822 124 80045	4700µF 20% 50V
C 34	5322 124 22614	1000µF 20% 50V
C 35	4822 121 41856	22nF 5% 250V
C 36	4822 124 40246	4,7µF 20% 63V
C 60	4822 121 41856	22nF 5% 250V
C 61	4822 124 40255	100µF 20% 63V

D 1	4822 130 82272	1N4004
D 2	4822 130 82272	1N4004
D 3	4822 130 82272	1N4004
D 4	4822 130 82272	1N4004
D 5	4822 130 82272	1N4004
D 6	4822 130 82272	1N4004
D 7	4822 130 82272	1N4004
D 8	4822 130 82272	1N4004
D 9	4822 130 82272	1N4004
D 10	4822 130 82272	1N4004
D 11	4822 130 82272	1N4004
D 12	4822 130 82272	1N4004
D 13	4822 130 82272	1N4004
D 14	4822 130 82272	1N4004
D 15	4822 130 82272	1N4004
D 16	4822 130 82272	1N4004
D 17	5322 130 34464	1N4448
D 18	5322 130 32677	1N5822
D 19	5322 130 34464	1N4448
D 20	4822 130 82272	1N4004
D 21	4822 130 82272	1N4004
D 22	4822 130 82272	1N4004
D 23	4822 130 82272	1N4004
D 24	5322 130 34464	1N4448
D 32	5322 130 34464	1N4448
D 33	5322 130 34464	1N4448
D 34	4822 130 82272	1N4004
D 35	4822 130 82272	1N4004
DV 1	4822 130 30682	BZX79B9V1
DV 2	4822 130 31981	BZX79B3V9
DV 3	4822 130 34174	BZX79B4V7
DZ 1	5322 130 50399	B40C3700/2200
DZ 2	5322 130 34962	B40C5000/3300

IC 2	5322 209 81236	LM337KC
IC 3	5322 209 81236	LM337KC
IC 4	4822 209 80591	LM317SP
IC 5	4822 209 80591	LM317SP
IC 6	4822 209 80591	LM317SP
IC 7	5322 209 81236	LM337KC
IC 8	5322 209 81236	LM337KC
IC 9	5322 209 70292	L296
IC10	4822 209 30987	MC34160

L 1	4822 158 10879	TOR. CHOKE 250µH
L 2	4822 158 10878	TOR. CHOKE 72µH

Q 1	4822 130 41096	BC550C
Q 2	4822 130 41096	BC550C
Q 3	4822 130 41096	BC550C
Q 4	4822 130 61755	BC560C
Q 5	4822 130 41096	BC550C
Q 7	4822 130 41096	BC550C

R 4	4822 050 23902	3k9 1% 0,6W
R 5	4822 050 26801	680Ω 1% 0,6W
R 6	4822 050 26802	6k8 1% 0,6W
R 7	4822 050 21502	1k5 1% 0,6W
R 8	4822 050 26802	6k8 1% 0,6W
R 9	4822 050 26801	680Ω 1% 0,6W
R 11	4822 050 22201	220Ω 1% 0,6W
R 12	4822 050 21001	100Ω 1% 0,6W
R 13	4822 050 22201	220Ω 1% 0,6W
R 14	4822 050 21001	100Ω 1% 0,6W
R 15	4822 050 21001	100Ω 1% 0,6W
R 16	4822 050 21002	1k 1% 0,6W
R 17	4822 050 21001	100Ω 1% 0,6W
R 18	4822 050 21001	100Ω 1% 0,6W
R 20	4822 050 11502	1k5 1% 0,6W
R 21	4822 050 21001	100Ω 1% 0,6W
R 22	4822 050 21002	1k 1% 0,6W
R 24	4822 050 25603	56k 1% 0,6W
R 25	4822 050 22201	220Ω 1% 0,6W
R 26	4822 050 26801	680Ω 1% 0,6W

R 27	4822 116 83594	R-PTC 0,75A 60V
R 28	4822 116 83594	R-PTC 0,75A 60V
R 29	4822 116 83593	R-PTC 1,6A 50V
R 30	4822 116 83593	R-PTC 1,6A 50V
R 31	4822 050 24702	4k7 1% 0,6W
R 32	4822 050 25605	5M6 1% 0,6W
R 33	4822 050 24703	47k 1% 0,6W
R 34	4822 050 11004	100k 1% 0,6W
R 35	4822 050 24302	4k3 1% 0,6W
R 36	4822 050 21503	15k 1% 0,6W
R 37	4822 050 21003	10k 1% 0,6W
R 38	4822 050 23902	3k9 1% 0,6W
R 40	5322 116 90018	0Ω
R 41	4822 050 21003	10k 1% 0,6W
R 42	4822 050 21504	150k 1% 0,6W

R 43	4822 050 21003	10k 1% 0,6W
R 44	4822 050 22203	22k 1% 0,6W
R 45	4822 050 24703	47k 1% 0,6W
R 46	4822 050 22203	22k 1% 0,6W
R 47	4822 050 22202	2k2 1% 0,6W
R 48	4822 050 22203	22k 1% 0,6W
R 64	4822 050 24704	470k 1% 0,6W
R 65	4822 050 22203	22k 1% 0,6W
R 66	4822 050 22403	24k 1% 0,6W
R 67	4822 050 21212	1k2 1% 0,6W

S 11	5322 209 81236	LM337KC

BS DAC PANEL

CD09	4822 126 12049	47nF 63V
CD10	4822 124 40433	47µF 20% 25V
CD11	4822 126 12049	47nF 63V
CD12	4822 126 12049	47nF 63V
CD13	4822 124 40433	47µF 20% 25V
CD14	4822 124 40433	47µF 20% 25V
CD15	4822 126 12049	47nF 63V
CD16	4822 126 12049	47nF 63V
CD17	4822 124 40433	47µF 20% 25V
CD18	4822 124 40433	47µF 20% 25V
CD19	4822 126 12049	47nF 63V
CD20	4822 126 12049	47nF 63V
CD21	4822 124 40433	47µF 20% 25V
CD22	4822 124 40433	47µF 20% 25V
CD23	4822 126 12049	47nF 63V
CD24	4822 126 12049	47nF 63V
CD25	4822 124 40433	47µF 20% 25V
CD26	4822 124 40433	47µF 20% 25V
CD31	4822 126 12042	39pF 2% 63V
CD32	4822 126 12042	39pF 2% 63V
CD33	5322 121 50999	470pF 1% 400V
CD34	5322 121 50999	470pF 1% 400V
CD35	4822 126 12042	39pF 2% 63V
CD36	4822 126 12042	39pF 2% 63V
CD37	5322 121 50999	470pF 1% 400V
CD38	5322 121 50999	470pF 1% 400V
C512	4822 124 40244	2,2µF 20% 63V
C523	4822 124 40433	47µF 20% 25V
C524	4822 126 12049	47nF 63V
C601	4822 121 51288	100pF 2% 630V
C602	4822 121 51288	100pF 2% 630V
C603	4822 121 51288	100pF 2% 630V
C604	4822 121 51288	100pF 2% 630V
C605	4822 121 43066	1nF 1% 400V
C606	4822 121 43066	1nF 1% 400V
C607	4822 121 51288	100pF 2% 630V
C608	4822 121 51288	100pF 2% 630V
C609	5322 122 31626	100pF 2% 500V
C610	5322 122 31626	100pF 2% 500V
C681	4822 124 41643	100µF 20% 16V
C682	4822 124 41643	100µF 20% 16V
C683	4822 124 41643	100µF 20% 16V
C684	4822 124 41643	100µF 20% 16V

QD01	4822 701 11933	SAA7350GP
Q511	4822 209 30264	SM5840FP
Q512	4822 209 30985	PST523C
Q601	5322 209 86234	NE5532N
Q602	5322 209 50602	NE5532N

RD09	4822 052 10478	4Ω7 5% 0,33W
RD10	4822 052 10478	4Ω7 5% 0,33W
RD11	4822 052 10478	4Ω7 5% 0,33W
RD12	4822 116 52261	24k 5% 0,5W
RD15	4822 050 21001	100Ω 1% 0,6W
RD16	4822 050 21001	100Ω 1% 0,6W
RD31	4822 050 24703	47k 1% 0,6W
RD32	4822 050 24703	47k 1% 0,6W
RD33	4822 050 24703	47k 1% 0,6W
RD34	4822 050 24703	47k 1% 0,6W
R512	4822 116 52234	100k 5% 0,5W
R513	4822 052 10478	4Ω7 5% 0,33W
R601	4822 050 28202	8k2 1% 0,6W
R602	4822 050 28202	8k2 1% 0,6W
R603	4822 050 28202	8k2 1% 0,6W
R604	4822 050 28202	8k2 1% 0,6W
R605	4822 050 29102	9k1 1% 0,6W
R606	4822 050 29102	9k1 1% 0,6W
R607	4822 050 29102	9k1 1% 0,6W
R608	4822 050 29102	9k1 1% 0,6W
R609	4822 050 25602	5k6 1% 0,6W
R610	4822 050 25602	5k6 1% 0,6W
R611	4822 050 27502	7k5 1% 0,6W
R612	4822 050 27502	7k5 1% 0,6W
R613	4822 050 25602	5k6 1% 0,6W
R614	4822 050 25602	5k6 1% 0,6W
R615	4822 116 52175	100Ω 5% 0,5W
R616	4822 116 52175	100Ω 5% 0,5W
R681	4822 052 10479	47Ω 5% 0,33W
R682	4822 052 10479	47Ω 5% 0,33W
R683	4822 052 10479	47Ω 5% 0,33W
R684	4822 052 10479	47Ω 5% 0,33W